Self Diagnosis
Supported model

SERVICE MANUAL LA-2A CHASSIS

MODEL	COMMANDER	DEST.	CHASSIS NO.
KDF-60XBR950	RM-Y914	US	
KDF-60XBR950	RM-Y914	Canadian	
KDF-70XBR950	RM-Y914	US	
KDF-70XBR950	RM-Y914	Canadian	

MODEL	COMMANDER	DEST.	CHASSIS NO.

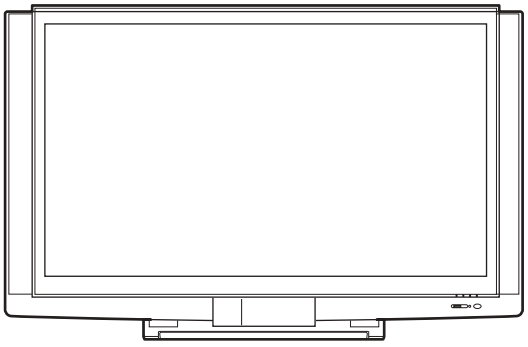

KDF-60XBR950/70XBR950

RM-Y914

LCD PROJECTION TV

SONY®

Projection System	3 LCD Panels, 1 lens projection system	
LCD Panel	0.87 inch TFT LCD panel Approx. 3.28 million dots (1,092,168 pixels)	
Projection Lens	High Performance, large diameter hybrid lens F2.4	
Antenna	75 ohm external terminal for VHF/UHF	
Lamp	UHP lamp, 120W XL-2100U	
Television System	NTSC, American TV Standard	
Screen Size (measured diagonally)	KDF-60XBR950: 60 inches KDF-70XBR950: 70 inches	
Channel Coverage		
VHF	2-13	
UHF	14-69	
DTV	1-999	
CATV	1-125	
Power Requirements	120V, 60 Hz	
Number of Inputs/Outputs		
DVI-HDTV	1 terminal, 3.3 V T.M.D.S., 50 ohms The DVI-HDTV input terminal is compliant with the EIA-861 standard and is not intended for use with personal computers.	
Video (IN)	4	1 Vp-p, 75 ohms unbalanced, sync negative
S Video (IN)	4	Y: 1 Vp-p, 75 ohms unbalanced, sync negative C: 0.286 Vp-p (Burst signal), 75 ohms
Audio (IN)	6	500 mVrms (100% modulation) Impedance: 47 kiloohms
AUDIO (VAR/FIX) OUT	1	500 mVrms at the maximum volume setting (Variable) 500 mVrms (Fixed) Impedance (output): 2 kiloohms
CONTROL S (IN)	1	minijack
CONTROL S (OUT)	1	minijack
Component Video Input	2 (Y, PB, PR)	Y: 1.0 Vp-p, 75 ohms unbalanced, sync negative PB: 0.7 Vp-p, 75 ohms PR: 0.7 Vp-p, 75 ohms
RF Inputs	2	
Digital Audio Optical Output (PCM/Dolby Digital)	1	Optical Rectangular (1)
i.LINK	3 total (1 on front panel)	4-pin S400 i.LINK terminal
Speaker Output	5 W (L), 5 W (R), 20 W (Woofer)	
Dimensions (W x H x D)	KDF-60XBR950: 1,600 x 1,008 x 583 mm (63 x 39 3/4 x 23 inches) KDF-70XBR950: 1,821 x 1,143 x 647 mm (71 3/4 x 45 x 25 1/2 inches)	

Mass	KDF-60XBR950: 78.5 kg (173 lbs) KDF-70XBR950: 92.5 kg (204 lbs)
Power Consumption	
In Use	250 W
In Standby	Under 1 W
In i.LINK Standby	Under 20 W
Supplied Accessories	
Remote Control	RM-Y914
AA (R6) Batteries	2 supplied for remote control
Cleaning Cloth	1
Optional Accessories	
TV Stand	SU-GW3
Lamp	XL-2100U
AV Cable	VC-810S/820S/830S
Component Video Cable	VMC-10/30
i.LINK cables	VMC-IL4415 (4-pin to 4-pin, 1.5 meters); VMC-IL4435 (4-pin to 4-pin, 3.5 meters)

Design and specifications are subject to change without notice.

SAFETY CHECK-OUT

(US model only)

After correcting the original service problem, perfom the following safety checks before releasing the set to the customer:

1. Check the area of your repair for unsoldered or poorly-soldered connections. Check the entire board surface for solder splashes and bridges.
2. Check the interboard wiring to ensure that no wires are "pinched" or contact high-wattage resistors.
3. Check that all control knobs, shields, covers, ground straps, and mounting hardware have been replaced. Be absolutely certain that you have replaced all the insulators.
4. Look for unauthorized replacement parts, particularly transistors, that were installed during a previous repair. Point them out to the customer and recommend their replacement.
5. Look for parts which, through functioning, show obvious signs of deterioration. Point them out to the customer and recom mend their replacement.
6. Check the line cords for cracks and abrasion. Recommend the replacement of any such line cord to the customer.
7. Check the condition of the monopole antenna (if any). Make sure the end is not broken off, and has the plastic cap on it. Point out the danger of impalement on a broken antenna to the customer, and recommend the antenna's replacement.
8. Check the B+ and HV to see they are at the values specified. Make sure your instruments are accurate;be suspicious of your HV meter if sets always have low HV.
9. Check the antenna temminals, metal trim, "metallized" knobs, screws, and all other exposed metal parts for AC leakage. Check leakage as described below.

LEAKAGE TEST

The AC leakage from any exposed metal part to earth ground and from all exposed metal parts to any exposed metal part having a return to chassis, must not exceed 0.5mA (500 microampers) . Leakage current can be measured by any one of three methods.

1. A commercial leakage tester, such as the Simpson 229 or RCA WT-540A. Follow the manufacturers' instructions to usc these instruments.
2. A battery-operated AC milliammeter. The Data Precision 245 digital multimeter is suitable for this job.
3. Measuring the voltage drop across a resistor by means of a VOM or battery-operated AC voltmeter. The "limit" indication is 0.75V, so analog meters must have an accurate low-voltage scale. The Simpson 250 and Sanwa SH-63Trd are examples of a passive VOM that is suitable. NearIy all battery operated digital multimeters that have a 2V AC range are suitable. (See Fig. A)

HOW TO FIND A GOOD EARTH GROUND

A cold-water pipe is guaranteed earth ground;the cover-plate retaining screw on most AC outlet boxes is also at earth ground. If the retaining screw is to be used as your earth-ground, verify that it is at ground by measuring the resistance between it and a cold-water pipe with an ohmmeter. The reading should be zero ohms. If a cold-water pipe is not accessible, connect a 60-l00 watts trouble light (not a neon lamp) between the hot side of the receptacle and the retaining screw. Try both slots, if necessary, to locate the hot side of the line, the lamp should light at normal brilliance if the screw is at ground potential. (See Fig. B)

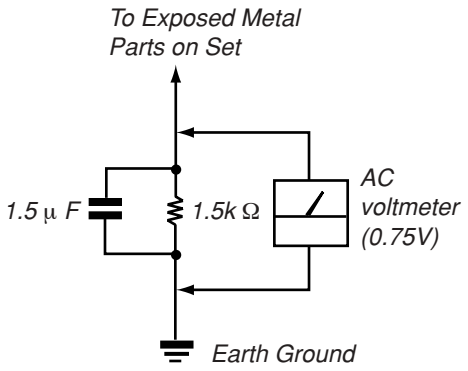

Fig. A. Using an AC voltmeter to check AC leakage.

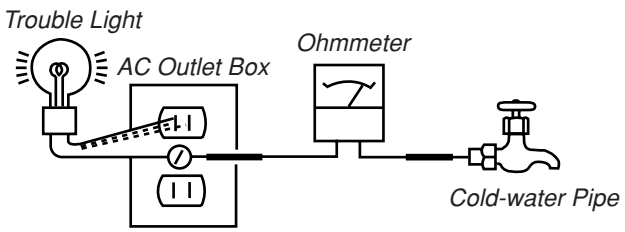

Fig. B. Checking for earth ground.

CAUTION

These servicing instructions are for use by qualified service personnel only.
To reduce the risk of electric shock, do not perform any servicing other than that contained in the operating instructions unless you are qualified to do so.

WARNING!!

AN ISOLATION TRANSFORMER SHOULD BE USED DURING ANY SERVICE TO AVOID POSSIBLE SHOCK HAZARD, BECAUSE OF LIVE CHASSIS.
THE CHASSIS OF THIS RECEIVER IS DIRECTLY CONNECTED TO THE AC POWER LINE.

SAFETY-RELATED COMPONENT WARNING!!

COMPONENTS IDENTIFIED BY SHADING AND MARK ⚠ ON THE SCHEMATIC DIAGRAMS, EXPLODED VIEWS AND IN THE PARTS LIST ARE CRITICAL TO SAFE OPERATION. REPLACE THESE COMPONENTS WITH SONY PARTS WHOSE PART NUMBERS APPEAR AS SHOWN IN THIS MANUAL OR IN SUPPLEMENTS PUBLISHED BY SONY. CIRCUIT ADJUSTMENTS THAT ARE CRITICAL TO SAFE OPERATION ARE IDENTIFIED IN THIS MANUAL. FOLLOW THESE PROCEDURES WHENEVER CRITICAL COMPONENTS ARE REPLACED OR IMPROPER OPERATION IS SUSPECTED.

ATTENTION!!

AFIN D'EVITER TOUT RISQUE DELECTROCUTION PROVENANT D'UN CHÁSSIS SOUS TENSION, UN TRANSFORMATEUR D'ISOLEMENT DOIT ETRE UTILISÉ LORS DE TOUT DEPANNAGE.
LE CHÁSSIS DE CE RECEPTEUR EST DIRECTEMENT RACCORDÉ Á L'ALIMENTATION SECTEUR.

ATTENTION AUX COMPOSANTS RELATIFS ÁLA SÉCURITÉ!!

LES COMPOSANTS IDENTIFIÉS PAR UNE FRAME ET PAR UNE MAPQUE ⚠ SUR LES SCHÉMAS DE PRINCIPE, LES VUES EXPLOSÉES ET LES LISTES DE PIECES SONT D'UNE IMPORTANCE CRITIQUE POUR LA SÉCURITÉ DU FONCTIONNEMENT. NE LES REMPLACER QUE PAR DES COMPOSANTS SONY DONT LE NUMÉRO DE PIÉCE EST INDIQUÉ DANS LE PRÉSENT MANUEL OU DANS DES SUPPLÉMENTS PUBLIÉS PAR SONY. LES RÉGLAGES DE CIRCUIT DONT L'IMPORTANCE EST CRITIQUE POUR LA SÉCURITÉ DU FONCTIONNEMENT SONT IDENTIFIES DANS LE PRÉSENT MANUEL. SUIVRE CES PROCÉDURES LORS DE CHAQUE REMPLACEMENT DE COMPOSANTS CRITIQUES, OU LORSQU'UN MAUVAIS FONCTIONNEMENT SUSPECTÉ.

TABLE OF CONTENTS

Section	Title	Page
1.	**SELF DIAGNOSIS FUNCTION**	8
2.	**DISASSEMBLY**	
2-1.	Rear Cover	12
2-2.	Service Position	12
2-3.	Screen Mirror Block Assembly	13
2-4.	DC Fan	14
2-5.	DC Fan	14
2-6.	F Board	15
2-7.	Power Supply Block	15
2-8.	Woofer Block Assembly	16
2-9.	G1 Board	16
2-10.	Optical Unit Block Assembly	17
2-11.	T Board	17
2-12.	UD Block, Antenna Switch, H4 Board	18
2-13.	U Board	18
2-14.	G2 Board, Q Box Assembly	19
2-15.	DIC Block, C2 Block	19
2-16	A Board	20
2-17.	H3 Board	20
2-18.	H1 Board, QH Board	21
2-19.	Speaker Block (L) and (R) Assembles	21
3.	**ELECTRICAL ADJUSTMENTS**	
3-1.	Electrical Adjustment by Remote Commander	23
3-1-1.	Method of Setting the Service Adjustment Mode	23
3-1-2.	Service Mode Adjustment	23
3-1-3.	Memory Write Confirmation Method	23
3-1-4.	Adjusting Buttons and Indicator	24
3-1-5.	Service Mode List	25
4.	**DIAGRAMS**	
4-1.	Block Diagram (1)	95
	Block Diagram (2)	96
	Block Diagram (3)	97
	Block Diagram (4)	98
	Block Diagram (5)	99
	Block Diagram (6)	100
	Block Diagram (7)	101
4-2.	Frame Schematic Diagram	102
4-3.	Circuit Boards Location	103
4-4.	Schematic Diagrams	103
(1)	Schematic Diagram of A (1/5) Board	104
(2)	Schematic Diagram of A (2/5) Board	105
(3)	Schematic Diagram of A (3/5) Board	106
(4)	Schematic Diagram of A (4/5) Board	107
(5)	Schematic Diagram of A (5/5) Board	108
(6)	Schematic Diagram of F Board	109
(7)	Schematic Diagram of G1 Board	110
(8)	Schematic Diagram of G2 Board	111
(9)	Schematic Diagram of H1, H3, H4, T Board	112
(10)	Schematic Diagram of QH Board	113
(11)	Schematic Diagram of QI (1/3) Board	114
(12)	Schematic Diagram of QI (2/3) Board	115
(13)	Schematic Diagram of QI (3/3) Board	116
(14)	Schematic Diagram of QM (1/5) Board	117
(15)	Schematic Diagram of QM (2/5) Board	118
(16)	Schematic Diagram of QM (3/5) Board	119
(17)	Schematic Diagram of QM (4/5) Board	120
(18)	Schematic Diagram of QM (5/5) Board	121
(19)	Schematic Diagram of QT Board	122
4-5.	Printed Wiring Boards	123
	• A Board (Side A)	123
	• A Board (Side B)	124
	• F Board	125
	• G1 Board (Side A)	126
	• G1 Board (Side B)	127
	• G2 Board	128
	• H1 Board	129
	• H3 Board	130
	• H4 Board	131
	• T Board	132
	• U Board (Side A)	133
	• U Board (Side B)	134
	• UD Board	135
	• QH Board	136
	• QI Board	137
	• QM Board (Side A)	138
	• QM Board (Side B)	139
	• QT Board	140
4-6	IC Block Diagrams	141
4-7	Semiconductors	142

Section	Title	Page
5. EXPLODED VIEWS		
5-1.	Control Block, Rear Cover	143
5-2.	Chassis-1	144
5-4.	Chassis-2	145
5-5.	Block-1	146
5-6.	Block-2	147
5-4.	Screen, Mirror Block Assembly	148
6. ELECTRICAL PARTS LIST		149
	• A Board	149
	• F Board	154
	• G1 Board	155
	• G2 Board	157
	• H1 Board	158
	• H3 Board	158
	• H4 Board	159
	• QH Board	160
	• QI Board	160
	• QM Board	162
	• QT Board	167
	• T Board	168
	• U Board	168
	• UD Board	172

SECTION 1
SELF DIAGNOSIS FUNCTION

1. Summary of Self-Diagnosis Function

- This device includes a self-diagnosis function.
- In case of abnormalities, the POWER/STANDBY indicator automatically blinks. It is possible to predict the abnormality location by the number of blinks. The Instruction Manual describes blinking of the POWER/STANDBY indicator.
- If the symptom is not reproduced sometimes in case of a malfunction, there is recording of whether a malfunction was generated or not. Operate the remote command to confirm the matter on the screen and to predict the location of the abnormality.

2. Diagnosis Items and Prediction of Malfunction Location

- When a malfunction occurs the POWER/STANDBY indicator only blinks for one of the following diagnosis items. In case of two or more malfunctions, the item which first occurred blinks. If the malfunctions occurred simultaneously, the item with the lower blink count blinks first.
- The screen display displays the results regarding all the diagnosis items listed below. The display "0" means that no malfunctions occurred.

Diagnosis Item	Number of times POWER/STANDBY indicator blinks	Probable Cause Location	Defected symptoms
Power does not turn on	0	- Power cord is not plugged in. - Fuse is burned out. (F1901:F board)	- Power does not come on. - No power is supplied to the unit. - AC power supply is faulty.
Lamp cover error	3 times	- Lamp cover is not attached securely.	- No picture/No sound
Fan stopped	4 times	- Fan1 or Fan2 or Fan3 or Fan4 power is not supplied.(A board) - Fan connector is not attached securely.	- No picture/No sound
Temp error	4 times	- Temperture is high. -IIC-E line connector (CN8041:A board,CN3951:H4 board) is not attached securely.	- No picture/No sound
Lamp driver error	5 times	- Lamp driver is faulty.	- No picture/No sound
+B OVP error	6 times	- +17V is not supplied.(G1 board)	- No picture/No sound
Audio error	7 times	- Audio line is shorted.(A,G1 board) - IC8504 or IC8505 (A board) is faulty. - PS1601 or 1602 is opened.(G1 board)	- No picture/No sound
D-OVP error	8 times	- +3.3V or +2.5V or +1.8V is over voltage.(G3 board)	- No picture/No sound
Lamp error	LAMP-LED flashes	- Lamp for the light source burns out.	- No picture/No sound

3. Blinking count display of POWER/STANDBY indicator

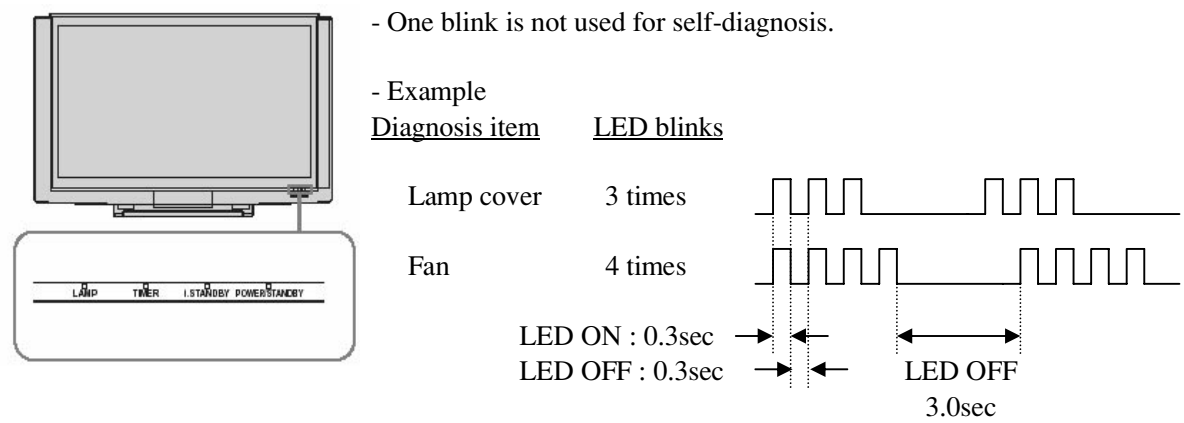

- Release of POWER/STANDBY indicator blinking

The POWER/STANDBY indicator blinking display is released by removing the plug from the power or leaving for 2 minutes.

4. Self-diagnosis screen displays

- In cases of malfunctions where it is not possible to determine the symptom such as when the power goes off occasionally or when the screen disappears occasionally, there is a screen display on whether the malfunction occurred or not in the past (and whether the detection circuit operated or not) in order to allow confirmation.

<Screen Display Method>

- Quickly press the remote command button in the following order from the standby state.

DISPLAY → Channel 5 → Vol - → POWER

Be aware that this differs from the method of entering the service mode (Vol +).

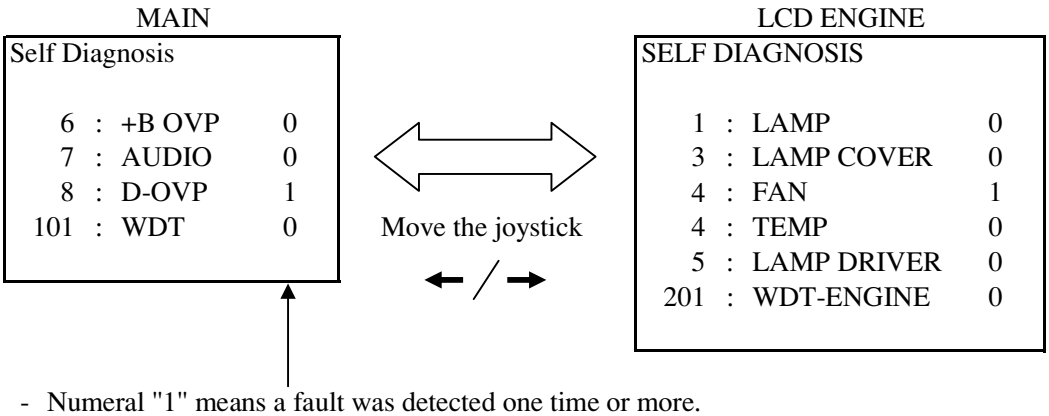

- Numeral "1" means a fault was detected one time or more.
- Numeral "0" means that no fault was detected.

- The results display is not automatically cleared. In case of repairs and after repairs, check the self-diagnosis screen and be sure to return the results display to "0".
- If the results display is not returned to "0" it will not be possible to judge a new malfunction after completing repairs.

<Method of Clearing Results Display>

1. Power off (Set to the standby mode)
2. DISPLAY → Channel 5 → Vol - → POWER
3. Channel 8 → ENTER

<Method of Ending Self-Diagnosis Screen>

- When ending the self-diagnosis screen completely, turn the power switch OFF on the remote commander or the main unit.

5. Self-Diagnosis function operation

-	3 :	Lamp cover	When lamp cover SW is opened then pin 1 of CN8034 on the A board is high, LCD Engine u-com (pin 27 of IC3208 on the C2 board) detects it and make turn off the lamp.
-	4 :	Fan	When Fan1 or Fan2 or Fan3 or Fan4 is stopped then pin 2 or 5 or 8 or 11 of CN8035 on the A board is high, LCD Engine u-com (pin 24 of IC3208 on the C2 board) detects it and make turn off the lamp.
-	4 :	Temp	When a temperature sensor on the H4 board detects a high temperature or IIC-E line connector (CN8041:A board,CN3951 H4 board) is not attached securely, LCD Engine u-com IIC-E Line detects it and make turn off the lamp.
-	5 :	Lamp driver	When lamp is not turned on then pin 29 of LCD Engine u-com (IC3208 on the C2 board) is high, checks pin 28 of LCD Engine u-com. If pin 28 is low, it is judged no high voltage.
-	6 :	+B OVP	When +17V line drop then pin 53 of MAIN u-com (IC3405 on the C2 board) is low, it turns off the main power.
-	7 :	Audio	When DC is appeared by audio amp failure at speaker line. Then it is detected by MAIN u-com (pin 59 of IC3405 on the C2 board) and it turns off the main power.
-	8 :	D-OVP	When +3.3V or +2.5V or +1.8V line over then pin 49 of MAIN u-com (IC3405 on the C2 board) is low, it turns off the main power.
-	LAMP :	Lamp	When lamp is not turned on then pin 29 of LCD Engine u-com (IC3208 on the C2 board) is high, checks pin 28 of LCD Engine u-com. If pin 28 is high, it is judged lamp is burned out.

<Self-Diagnosis block diagram>

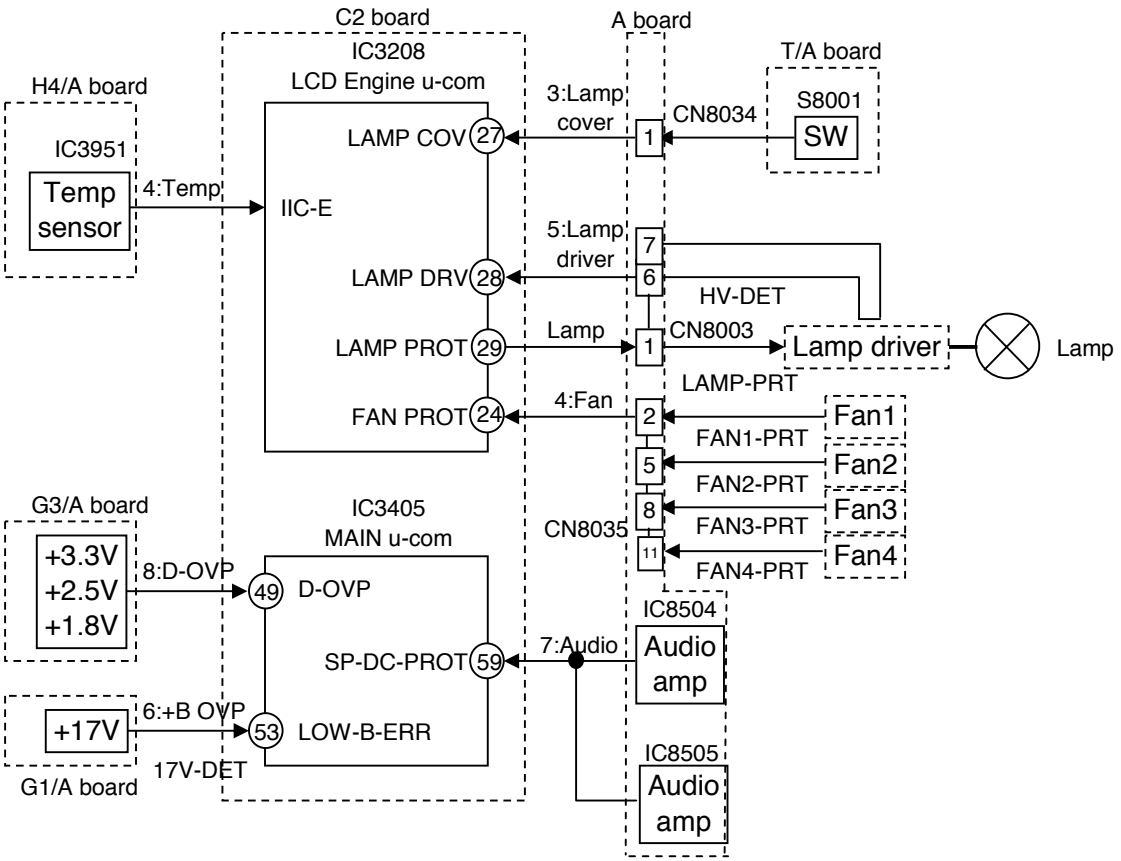

SECTION 2
DISASSEMBLY

2-1. REAR COVER

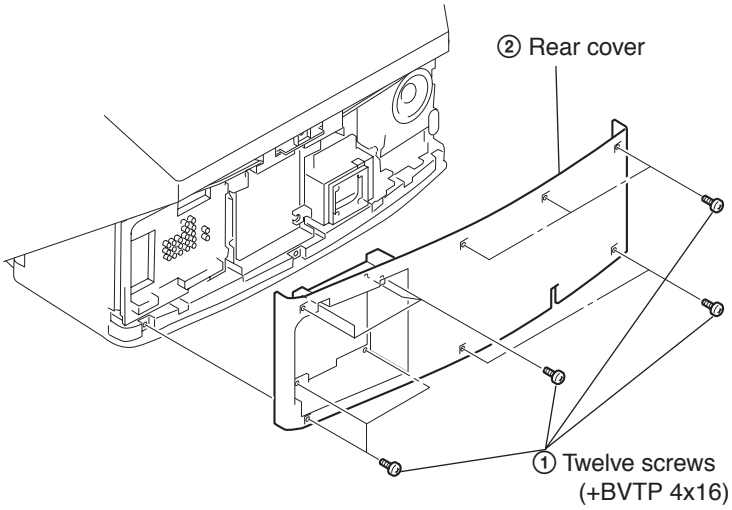

2-2. SERVICE POSITION

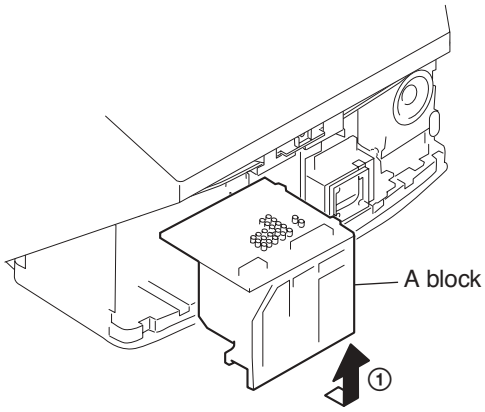

2-3. SCREEN MIRROR BLOCK ASSEMBLY

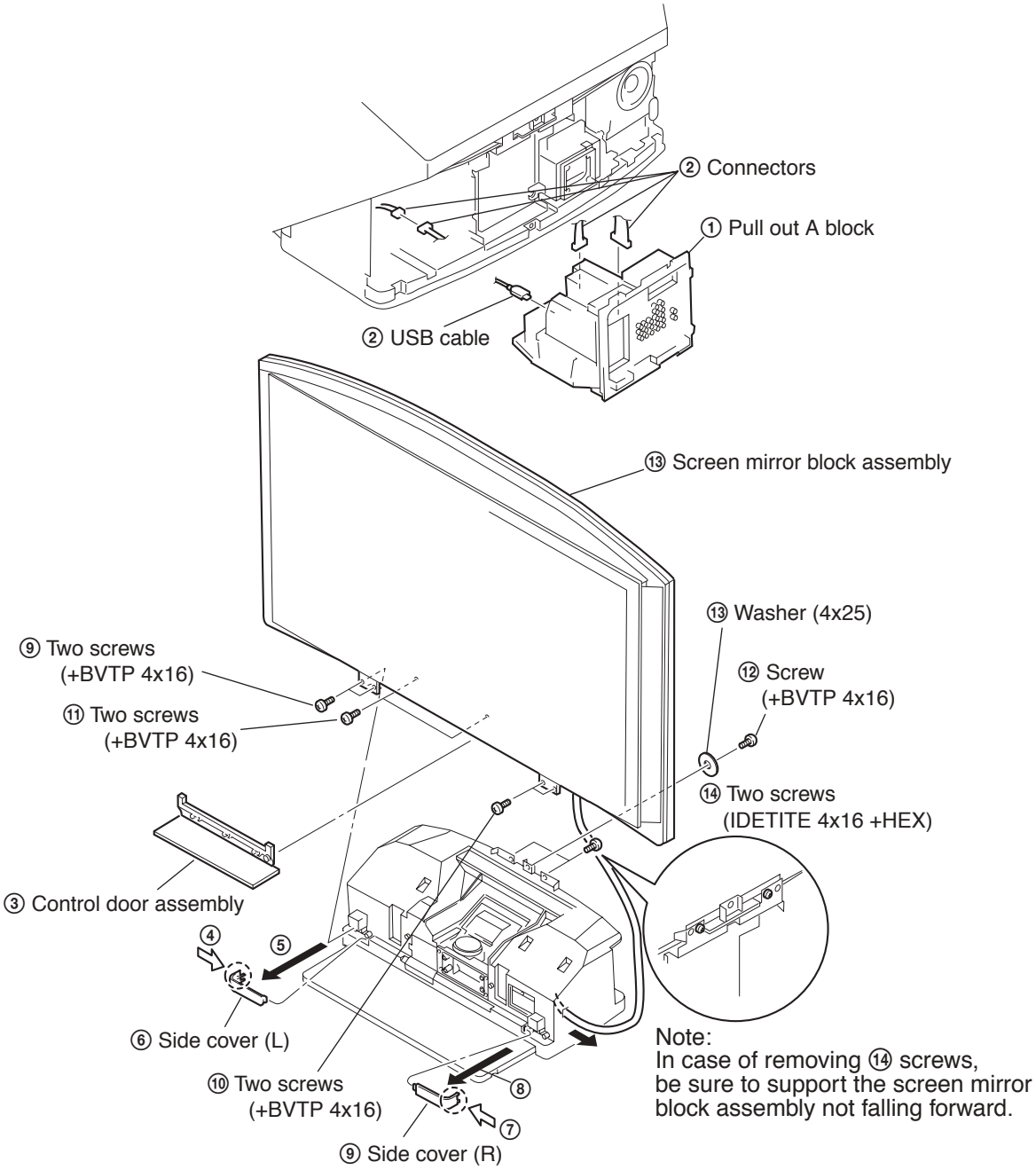

2-4. DC FAN

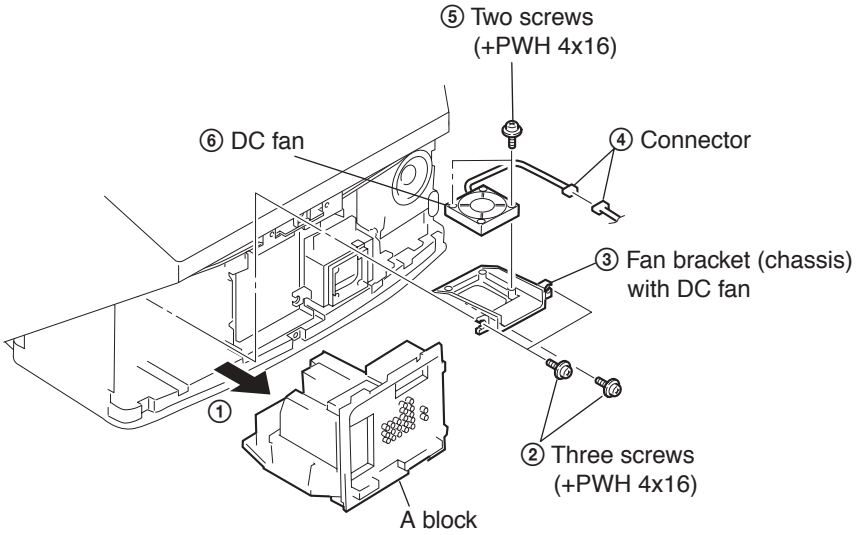

2-5. DC FAN

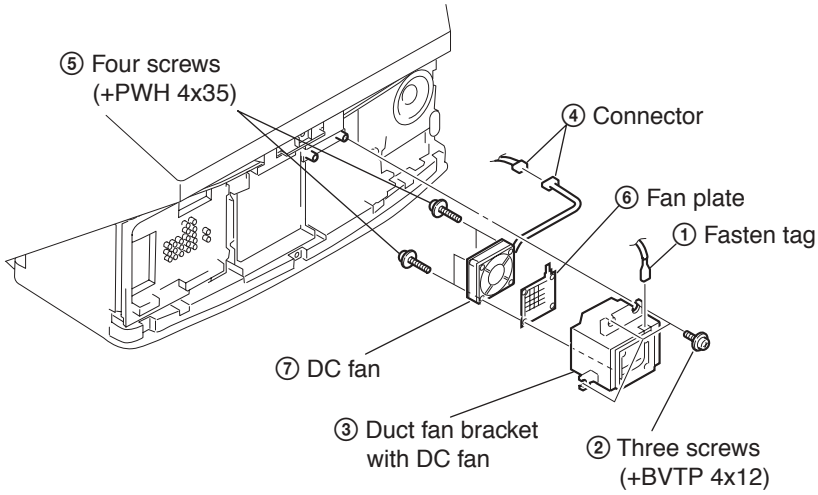

2-6. F BOARD

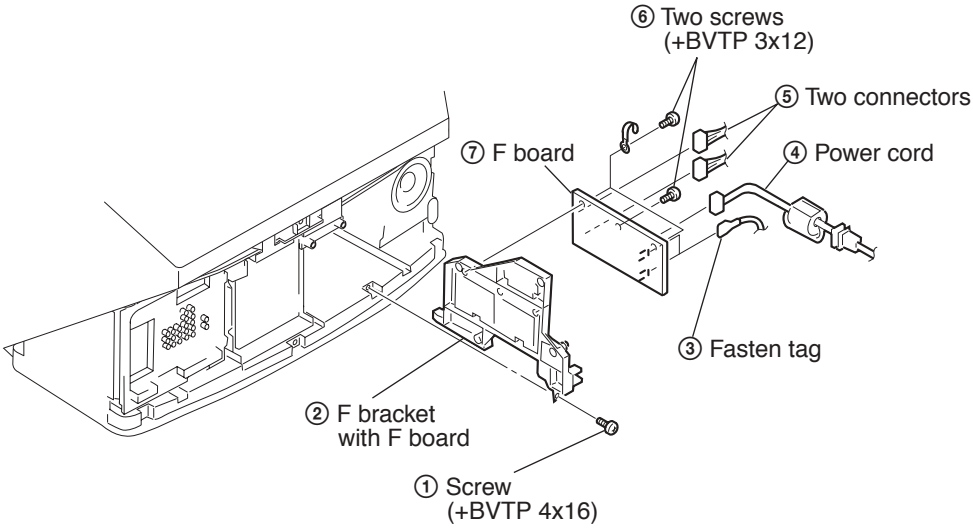

2-7. POWER SUPPLY BLOCK

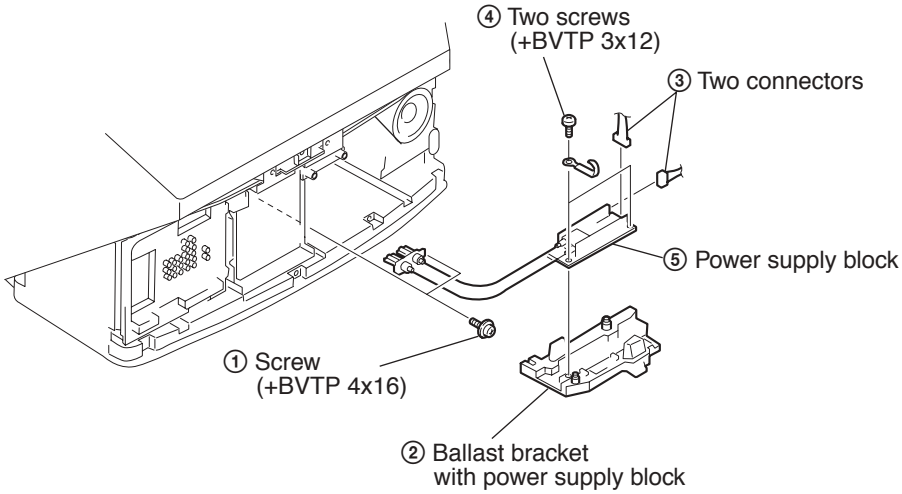

2-8. WOOFER BLOCK ASSEMBLY

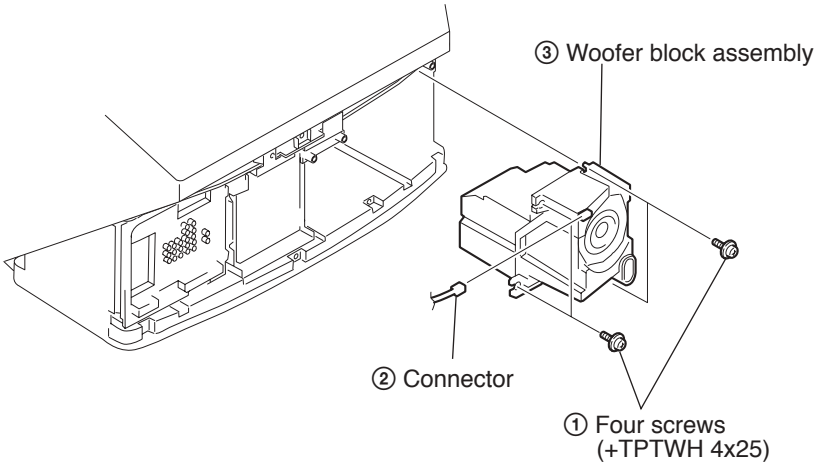

2-9. G1 BOARD

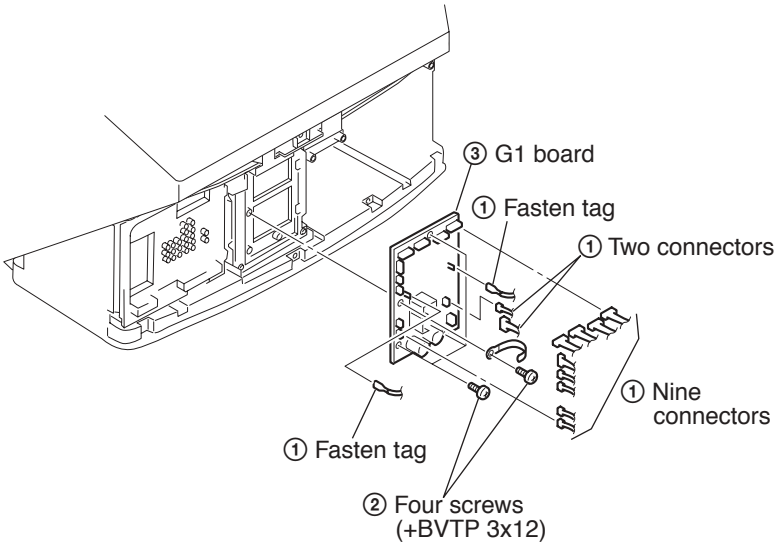

2-10. OPTICAL UNIT BLOCK ASSEMBLY

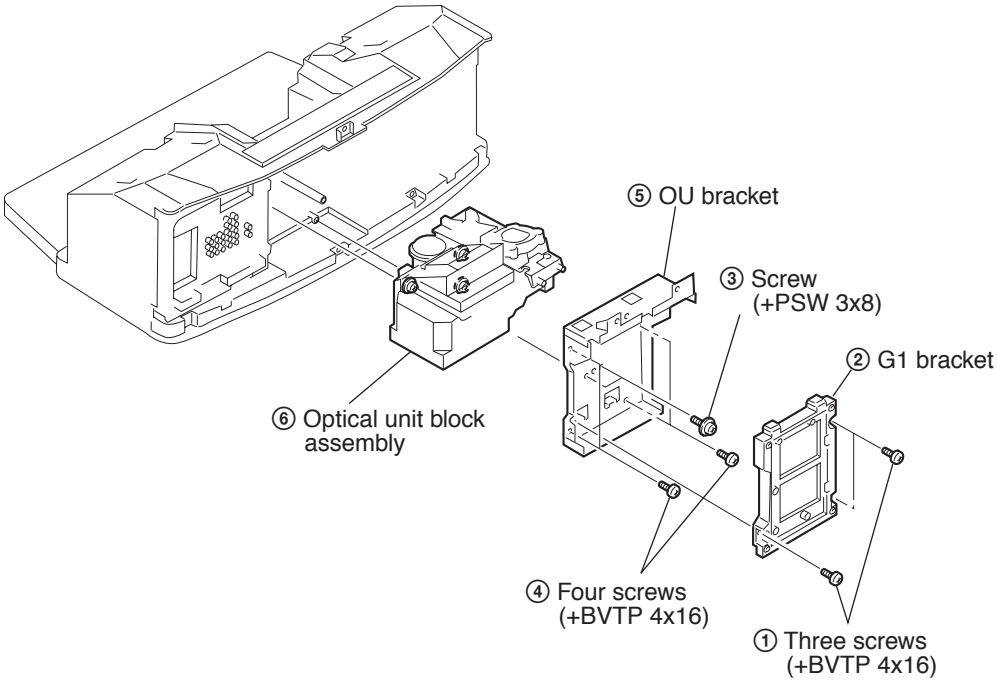

2-11. T BOARD

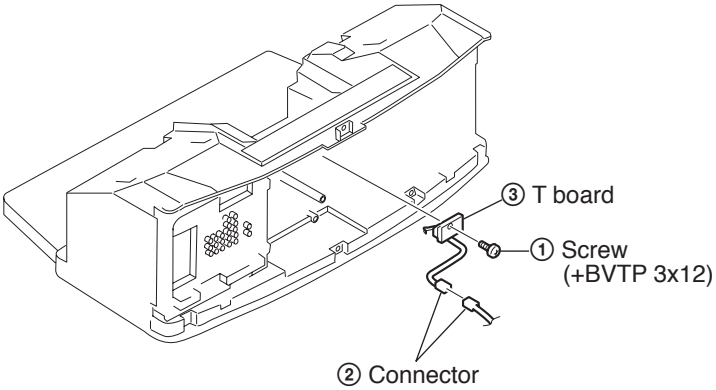

2-12. UD BLOCK, ANTENNA SWITCH, H4 BOARD

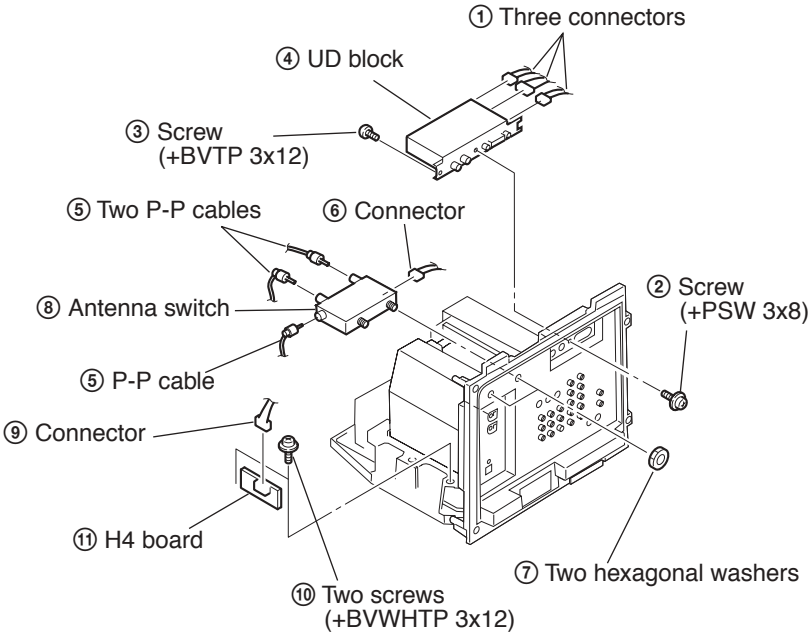

2-13. U BOARD

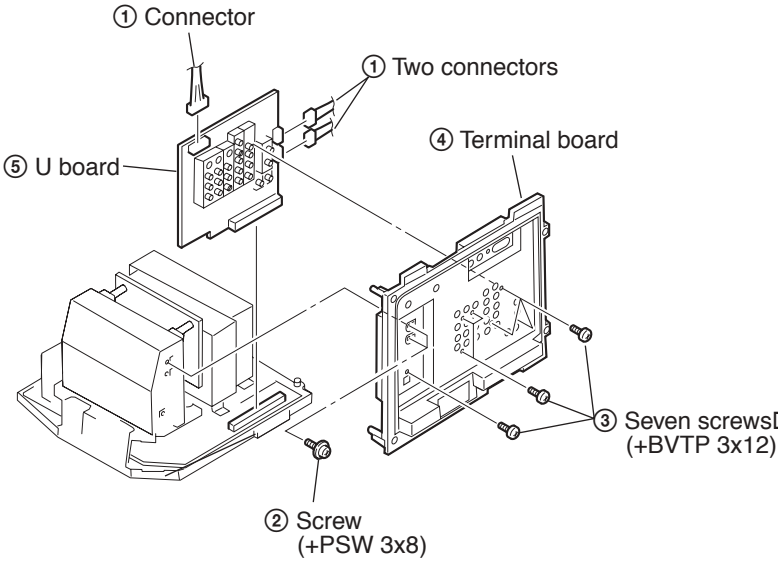

2-14. G2 BOARD, Q BOX ASSEMBLY

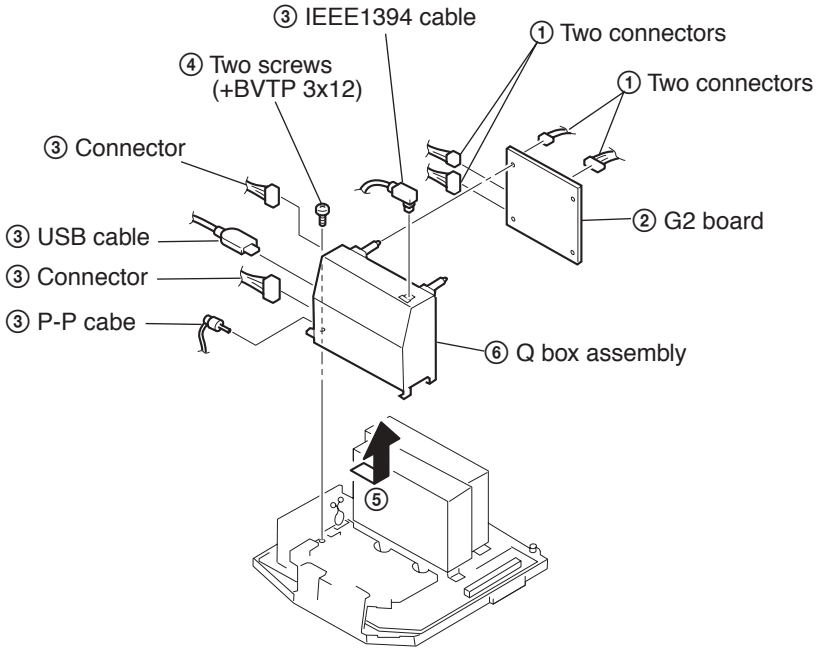

2-15. DIC BLOCK, C2 BLOCK

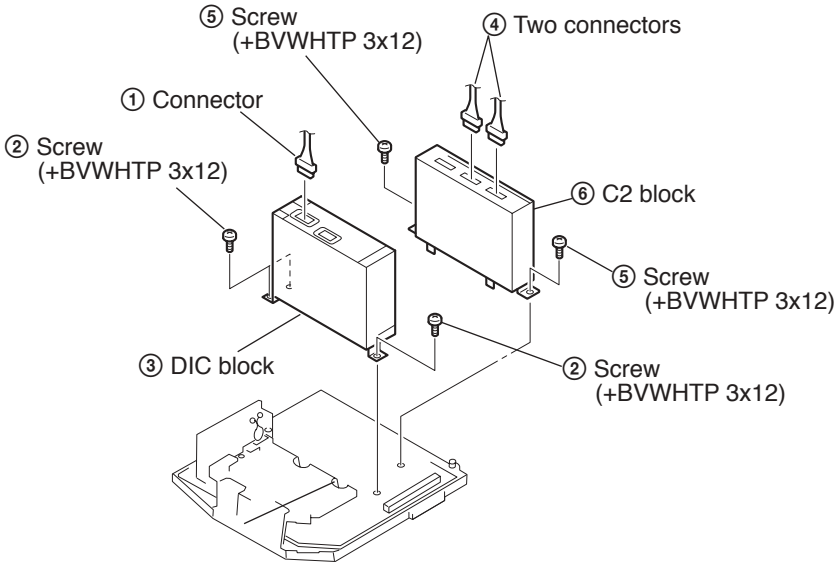

2-16. A BOARD

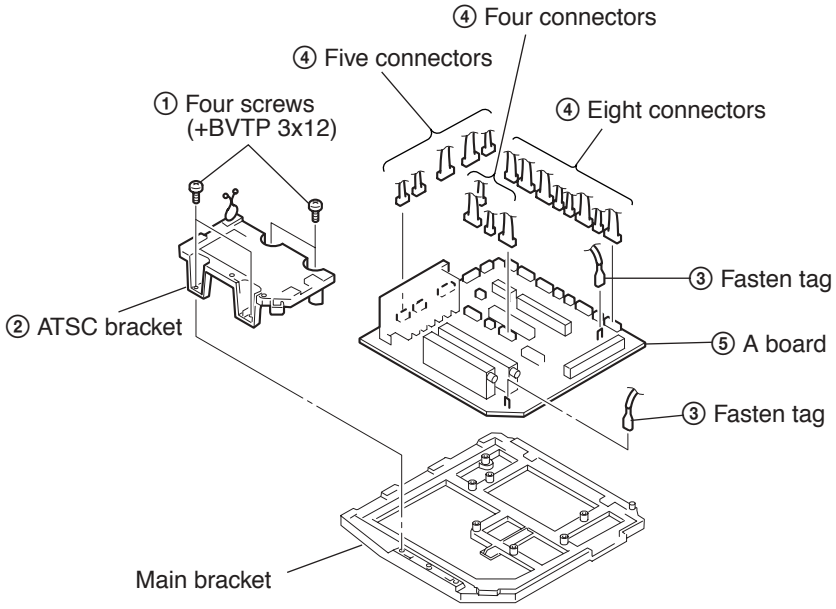

2-17. H3 BOARD

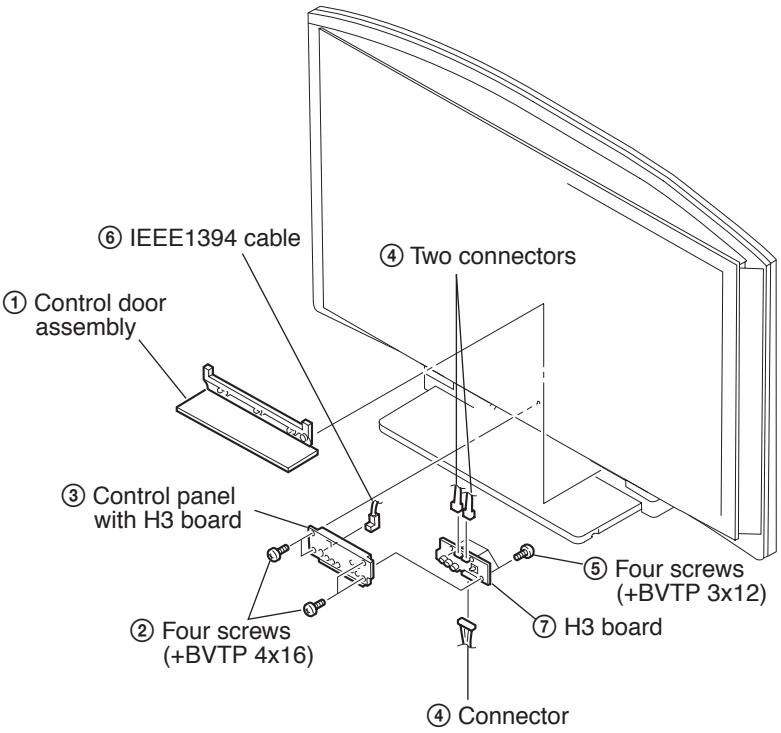

2-18. H1 BOARD, QH BOARD

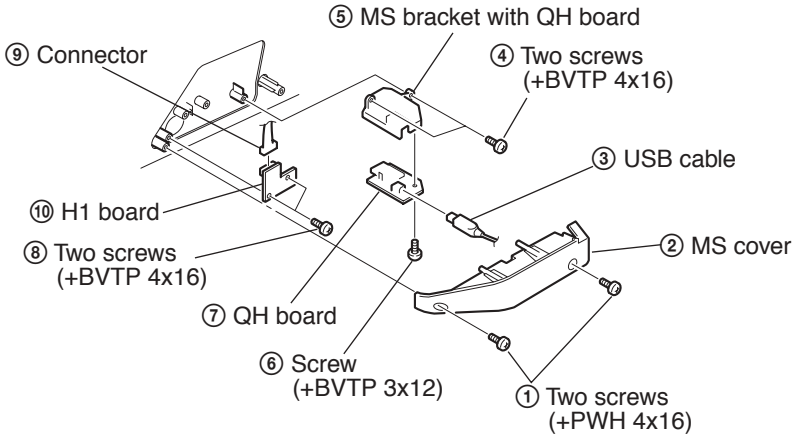

2-19. SPEAKER BLOCK (L) AND (R) ASSEMBLIES

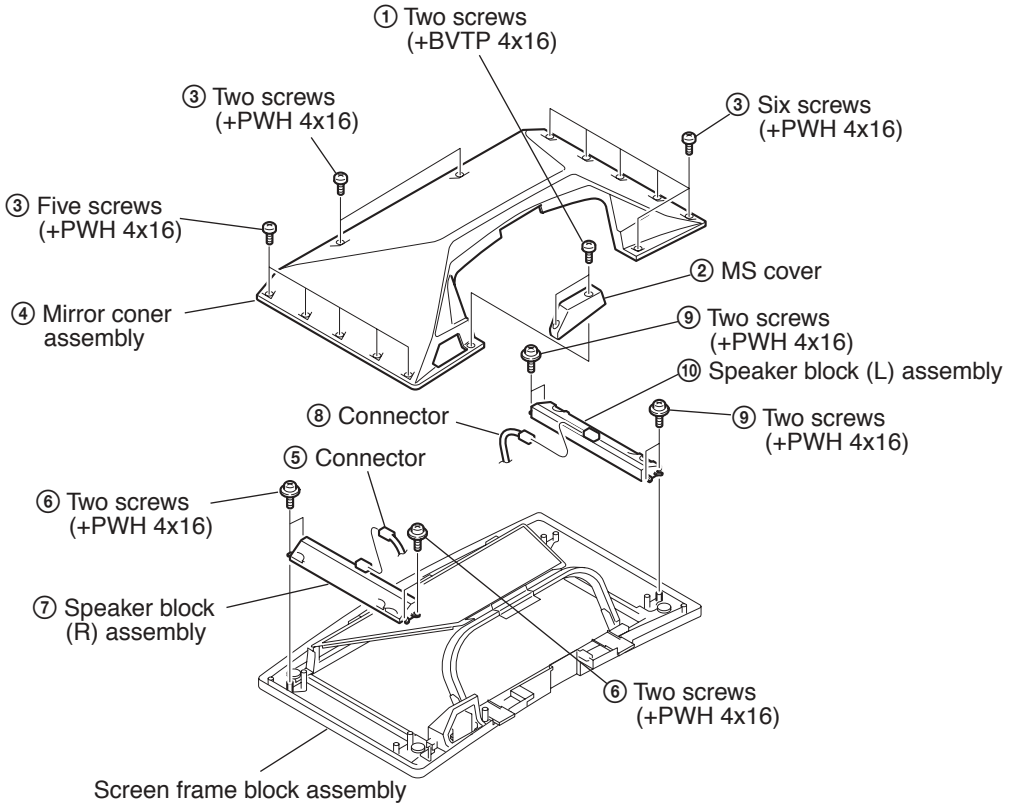

MEMO

SECTION 3
ELECTRICAL ADJUSTMENTS

3-1. ELECTRICAL ADJUSTMENT BY REMOTE COMMANDER

By using remote commander (RM-Y914), all circuit adjustments can be made.

NOTE : Test Equipment Required.

1. Pattern Generator (with component outputs)
2. Oscilloscope
3. Digital multimeter

3-1-1. Method of Setting the Service Adjustment Mode

1. Standby mode. (Power off)
2. DISPLAY → 5 → VOL (+) → TV POWER
   on the remote commander.
   (Press each button within a second.)
   The following service screen will appear.

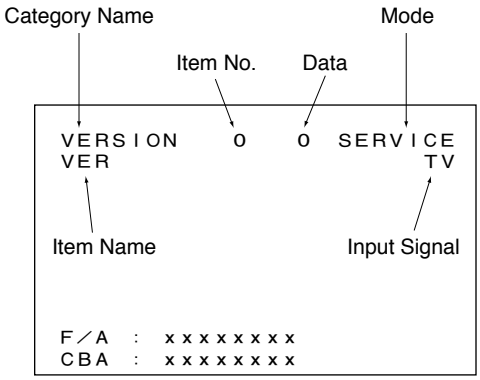

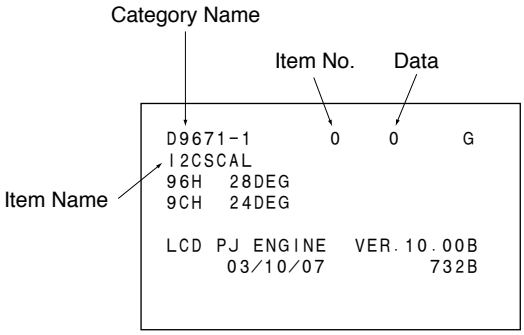

<LCD PROJECTOR ENGINE>

3-1-2. Service Mode Adjustment

1. The SCREEN displays the item being adjusted.
2. Press "①" or "④" on the remote commander to select the adjustment item.
3. Press "③" or "⑥" on the remote commander to change the data.
4. Press "②" or "⑤" on the remote commander to select the category.
   Every time you press "②" (Category up), Service mode changes in the order as shown below.

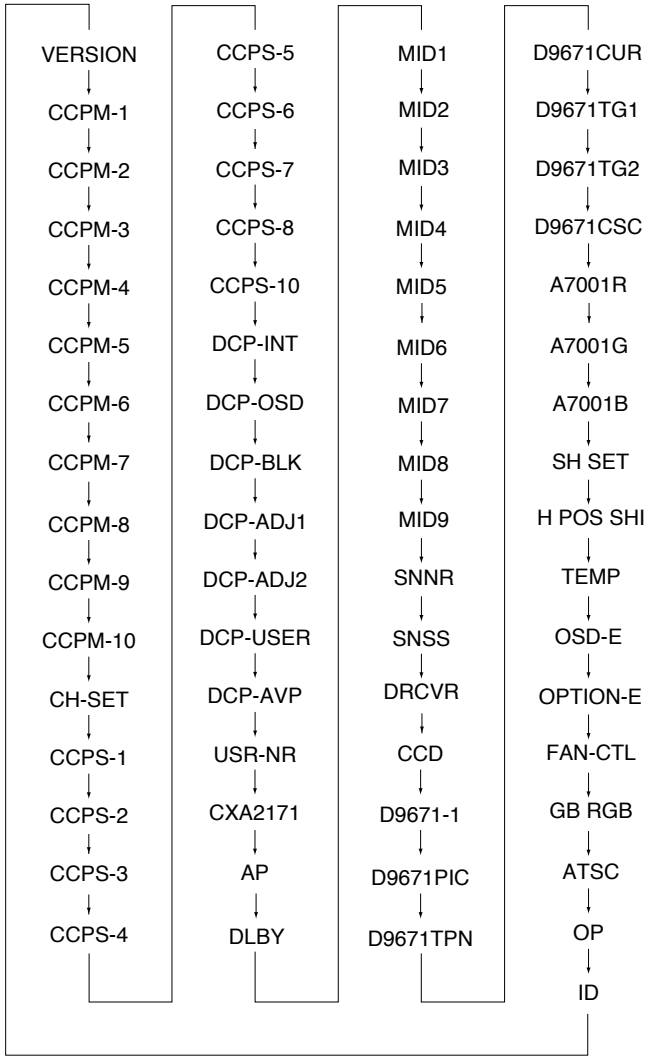

5. If you want to recover the latest values press "⓪" then "ENTER" to read the memory.
6. Press "MUTING" then "ENTER" to write into memory.
7. Turn power off.

<Method of setting the shipping condition>

1. Service Adjustment mode.
2. Press "⑧" then "ENTER"
3. Wait until appearing " Initial Setup" display.
4. Disconnect AC plug and connect again to change factory reset condition completely.

3-1-3. Memory Write Confirmation Method

1. After adjustment, turn power off with the remote commander.
2. Turn power on and set to service mode.
3. Call the adjusted items again and confirm they were adjusted.

3-1-4. Adjusting Buttons and Indicator

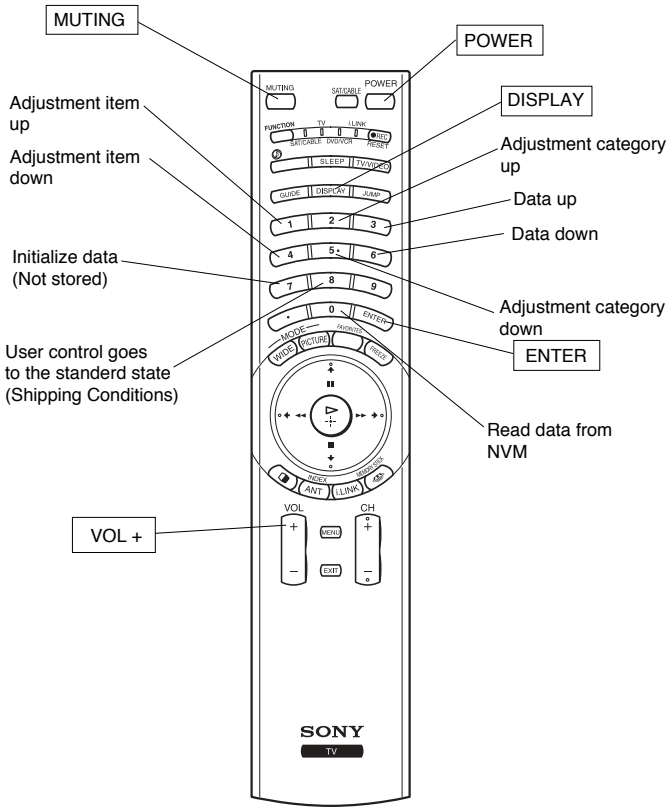

RM-Y914

FUNCTION OF KEYS ON COMMANDER

- ① : Changes adjustment item. (item No. moves up)
- ④ : Changes adjustment item. (item No. moves down)
- ② : Changes adjustment category. (category moves up)
- ⑤ : Changes adjustment category. (category moves down)
- ③ : Changes data value. (up)
- ⑥ : Changes data value. (down)

Commander Function

Button	Mode	Description
MUTING + ENTER	WRITE	Writes data to NVM.
⓪ + ENTER	READ	Reads data from NVM.
⑧ + ENTER	RESET	Set the shipping condition.

3-1-5. Service Mode List

Note: • shaded items are fixed. There is no need to change data. Others are different a little in the sets individually. Basically, there is no need to change data, too.

CCPM-1

Functionality No.	Functionality Name	Data	Remarks
0	SHPC	*1	
1	FUP2	*1	
2	YNR	*1	
3	CNR	*1	
4	SSHP	*1	
5	YEQ	*1	
6	SHF0	*1	
7	SECA	*2	
8	YCDL	*3	
9	YLEV	*3	
10	CLEV	*3	
11	SHUE	*4	
12	CEQ	*4	
13	CBPF	*4	
14	CBPA	*4	
15	KILV	*4	
16	APGA	*4	
17	NCOM	*4	

Standards *1

No.	Name	UV					Video				
		Vivid		Standard	Pro	Reserved	Vivid		Standard	Pro	Reserved
		60"	70"				60"	70"			
0	SHPC	1	3	1	1	0	1	3	1	1	0
1	FUP2	0	0	0	0	0	0	0	0	0	0
2	YNR	0	0	0	0	0	0	0	0	0	0
3	CNR	0	0	0	0	0	0	0	0	0	0
4	SSHP	2	3	1	1	7	5	6	5	5	7
5	YEQ	3	3	1	1	3	1	1	1	1	3
6	SHF0	1	1	1	1	1	1	1	1	1	1

No.	Name	Component(AVM(YCbCr))							
		480i				480p			
		Vivid	Standard	Pro	Reserved	Vivid	Standard	Pro	Reserved
0	SHPC	0	0	0	0	0	0	0	0
1	FUP2	0	0	0	0	0	0	0	0
2	YNR	0	0	0	0	0	0	0	0
3	CNR	0	0	0	0	0	0	0	0
4	SSHP	7	7	7	7	7	7	7	7
5	YEQ	3	3	3	3	3	3	3	3
6	SHF0	1	1	1	1	1	1	1	1

No.	Name	Component(AVM(YCbCr))							
		1080i				720p			
		Vivid	Standard	Pro	Reserved	Vivid	Standard	Pro	Reserved
0	SHPC	0	0	0	0	0	0	0	0
1	FUP2	0	0	0	0	0	0	0	0
2	YNR	0	0	0	0	0	0	0	0
3	CNR	0	0	0	0	0	0	0	0
4	SSHP	7	7	7	7	7	7	7	7
5	YEQ	3	3	3	3	3	3	3	3
6	SHF0	1	1	1	1	1	1	1	1

No.	Name	DVI(AVM(RGB)/DVI)							
		480i				480p			
		Vivid	Standard	Pro	Reserved	Vivid	Standard	Pro	Reserved
0	SHPC	0	0	0	0	0	0	0	0
1	FUP2	0	0	0	0	0	0	0	0
2	YNR	0	0	0	0	0	0	0	0
3	CNR	0	0	0	0	0	0	0	0
4	SSHP	7	7	7	7	7	7	7	7
5	YEQ	3	3	3	3	3	3	3	3
6	SHF0	1	1	1	1	1	1	1	1

No.	Name	DVI(AVM(RGB)/DVI)							
		1080i				720p			
		Vivid	Standard	Pro	Reserved	Vivid	Standard	Pro	Reserved
0	SHPC	0	0	0	0	0	0	0	0
1	FUP2	0	0	0	0	0	0	0	0
2	YNR	0	0	0	0	0	0	0	0
3	CNR	0	0	0	0	0	0	0	0
4	SSHP	7	7	7	7	7	7	7	7
5	YEQ	3	3	3	3	3	3	3	3
6	SHF0	1	1	1	1	1	1	1	1

No.	Name	DVI(AVM(RGB)/DVI)			
		VGA(VGA/OTHER)			
		Vivid	Standard	Pro	Reserved
0	SHPC	0	0	0	0
1	FUP2	0	0	0	0
2	YNR	0	0	0	0
3	CNR	0	0	0	0
4	SSHP	7	7	7	7
5	YEQ	3	3	3	3
6	SHF0	1	1	1	1

No.	Name	i.LINK(ex DV) for XBR(BS/CS/i.LINK(ex DV))							
		480i(ex DV Format)(480i)				480p			
		Vivid	Standard	Pro	Reserved	Vivid	Standard	Pro	Reserved
0	SHPC	0	0	0	0	0	0	0	0
1	FUP2	0	0	0	0	0	0	0	0
2	YNR	0	0	0	0	0	0	0	0
3	CNR	0	0	0	0	0	0	0	0
4	SSHP	7	7	7	7	7	7	7	7
5	YEQ	3	3	3	3	3	3	3	3
6	SHF0	1	1	1	1	1	1	1	1

No.	Name	i.LINK(ex DV) for XBR(BS/CS/i.LINK(ex DV))							
		1080i				720p			
		Vivid	Standard	Pro	Reserved	Vivid	Standard	Pro	Reserved
0	SHPC	0	0	0	0	0	0	0	0
1	FUP2	0	0	0	0	0	0	0	0
2	YNR	0	0	0	0	0	0	0	0
3	CNR	0	0	0	0	0	0	0	0
4	SSHP	7	7	7	7	7	7	7	7
5	YEQ	3	3	3	3	3	3	3	3
6	SHF0	1	1	1	1	1	1	1	1

No.	Name	i.LINK for XBR(BS/CS/i.LINK(ex DV))				i.LINK(DV)			
		480i(DV Format)Lower							
		Vivid	Standard	Pro	Mild	Vivid	Standard	Pro	Reserved
0	SHPC	0	0	0	0	0	0	0	0
1	FUP2	0	0	0	0	0	0	0	0
2	YNR	0	0	0	0	0	0	0	0
3	CNR	0	0	0	0	0	0	0	0
4	SSHP	7	7	7	7	7	7	7	7
5	YEQ	3	3	3	3	3	3	3	3
6	SHF0	1	1	1	1	1	1	1	1

No.	Name	ATSC for XBR(DTT/ATSC)							
		480i				480p			
		Vivid	Standard	Pro	Reserved	Vivid	Standard	Pro	Reserved
0	SHPC	0	0	0	0	0	0	0	0
1	FUP2	0	0	0	0	0	0	0	0
2	YNR	0	0	0	0	0	0	0	0
3	CNR	0	0	0	0	0	0	0	0
4	SSHP	7	7	7	7	7	7	7	7
5	YEQ	3	3	3	3	3	3	3	3
6	SHF0	1	1	1	1	1	1	1	1

No.	Name	ATSC for XBR(DTT/ATSC)							
		1080i				720p			
		Vivid	Standard	Pro	Reserved	Vivid	Standard	Pro	Reserved
0	SHPC	0	0	0	0	0	0	0	0
1	FUP2	0	0	0	0	0	0	0	0
2	YNR	0	0	0	0	0	0	0	0
3	CNR	0	0	0	0	0	0	0	0
4	SSHP	7	7	7	7	7	7	7	7
5	YEQ	3	3	3	3	3	3	3	3
6	SHF0	1	1	1	1	1	1	1	1

No.	Name	ATSC(DTT/ATSC)			
		Lower			
		Vivid	Standard	Pro	Mild
0	SHPC	0	0	0	0
1	FUP2	0	0	0	0
2	YNR	0	0	0	0
3	CNR	0	0	0	0
4	SSHP	7	7	7	7
5	YEQ	3	3	3	3
6	SHF0	1	1	1	1

No.	Name	MS for XBR(DATA(ADD))							
		STILL(1080i)(480i)				MOVIE(CONT-PANEL) (OTHER)			
		Vivid	Standard	Pro	Reserved	Vivid	Standard	Pro	Reserved
0	SHPC	0	0	0	0	0	0	0	0
1	FUP2	0	0	0	0	0	0	0	0
2	YNR	0	0	0	0	0	0	0	0
3	CNR	0	0	0	0	0	0	0	0
4	SSHP	7	7	7	7	7	7	7	7
5	YEQ	3	3	3	3	3	3	3	3
6	SHF0	1	1	1	1	1	1	1	1

No.	Name	MS for XBR(DATA(INDEPENDENT))							
		MOVIE(LOW) (480i)				MOVIE(HIGH) OTHER			
		Vivid	Standard	Pro	Reserved	Vivid	Standard	Pro	Mild
0	SHPC	0	0	0	0	0	0	0	0
1	FUP2	0	0	0	0	0	0	0	0
2	YNR	0	0	0	0	0	0	0	0
3	CNR	0	0	0	0	0	0	0	0
4	SSHP	7	7	7	7	7	7	7	7
5	YEQ	3	3	3	3	3	3	3	3
6	SHF0	1	1	1	1	1	1	1	1

Standards *2

No.	Name	UV	Video
7	SECA	10	10

No.	Name	Component(AVM(YCbCr))				DVI(AVM(RGB)/DVI)				
		480i	480p	1080i	720p	480i	480p	1080i	720p	VGA(VGA/OTHER)
7	SECA	0	0	0	0	0	0	0	0	0

No.	Name	i.LINK(ex DV) for XBR(BS/CS/i.LINK(ex DV))					i.LINK(DV)
		480i(ex DV)	480p	1080i	720p	Lower	
7	SECA	0	0	0	0	0	0

No.	Name	ATSC(DTT/ATSC)				
		480i	480p	1080i	720p	Lower
7	SECA	0	0	0	0	0

No.	Name	DATA(ADD)		DATA(INDEPENDENT)	ATSC-MS
		480i	OTHER	480i	
7	SECA	0	0	0	0

Standards *3

No.	Name	UV	Video	Component (not 480i)	ATSC for XBR (not 480i) (AVM(Y/Cb/Cr))	DVI (not 480i) (AVM(RGB)/DVI)	i.LINK (480i and ex DV) for XBR	i.LINK(DV)	MS for XBR (DTT/ATSC)
8	YCDL	8	8	7	7	7	7	7	7
9	YLEV	180	184	178	175	178	175	175	175
10	CLEV	100	104	187	185	187	185	185	185

No.	Name	Component (480i)	ATSC for XBR (480i) (AVM(Y/Cb/Cr))	DVI (480i) (AVM(RGB)/DVI)	i.LINK (not 480i and ex DV) for XBR
8	YCDL	7	7	7	7
9	YLEV	175	175	175	175
10	CLEV	185	185	185	185

Standards *4

No.	Name	UV			Video
		UV(GR OFF)	GR ON		
			GCR ON	GCR OFF	
11	SHUE	7	7	7	7
12	CEQ	3	1	1	0
13	CBPF	3	2	2	0
14	CBPA	0	1	1	0
15	KILV	2	2	2	2
16	APGA	0	0	0	0
17	NCOM	0	0	0	0

CCPM-2

Functionality		Data	Rremarks
No.	Name		
0	PACK	*1	
1	CLPP	*2	
2	SSEP	*2	
3	CLPG	*2	
4	CLPA	*2	
5	AFCV	*2	
6	HSSL	*2	
7	VSSL	*2	
8	STIP	*2	
9	SYLP	*2	
10	SYFI	*2	
11	AFCG	*2	
12	LOWG	*2	
13	AFCM	*2	
14	LOCO	*2	
15	HICO	*2	
16	CDM1	*2	
17	CDM2	*2	
18	CDM3	*2	
19	BGPS	*2	
20	VINT	*2	
21	HSPO	*2	
22	MVSW	*2	
23	MVCT	*2	
24	MVHC	*2	
25	CLAL	*2	
26	ADPS	*2	
27	CLGA	*2	
28	YTRP	*2	
29	CTRP	*2	
30	CROF	*2	
31	SDLP	*2	
32	ROM2	*2	

Standards *1

No.	Name	UV	Video1	Video2	Video3	Video4
0	PACK	0	4	4	4	4

No.	Name	Video5(COMPONENT1)				Video6(COMPONENT2)			
		480i	480p	1080i	720p	480i	480p	1080i	720p
0	PACK	5	6	7	8	5	6	7	8

No.	Name	i.LINK/ATSC/MS for XBR(AVM(YCbCr))				DVI(AVM(RGB)/DVI)				
		480i	480p	1080i	720p	480i	480p	1080i	720p	VGA/OTHER
0	PACK	5	6	7	8	5	6	7	8	13

Standards *2

No.	Name	PACK = 0	PACK = 1	PACK = 2	PACK = 3	PACK = 4	PACK = 5	PACK = 6	PACK = 7	PACK = 8
1	CLPP	28	28	28	28	28	28	28	28	28
2	SSEP	0	0	0	0	0	0	0	0	0
3	CLPG	0	0	0	0	0	0	0	0	0
4	CLPA	0	0	0	0	0	0	0	0	0
5	AFCV	1	1	1	1	1	1	1	1	1
6	HSSL	2	2	2	2	0	0	0	3	3
7	VSSL	2	2	2	2	2	2	2	3	3
8	STIP	2	2	2	2	2	2	2	2	2
9	SYLP	0	0	0	0	0	0	0	0	0
10	SYFI	1	0	1	0	1	1	0	0	0
11	AFCG	1	1	2	2	0	1	1	1	1
12	LOWG	0	0	0	0	0	0	0	0	0
13	AFCM	0	0	0	0	0	0	0	0	0
14	LOCO	0	0	0	0	0	0	0	0	0
15	HICO	0	0	0	0	0	0	0	0	0
16	CDM1	2	2	2	2	2	2	2	2	2
17	CDM2	0	0	0	0	0	0	0	0	0
18	CDM3	0	0	0	0	0	0	0	0	0
19	BGPS	10	10	10	10	10	10	10	10	10
20	VINT	7	7	7	7	7	7	7	3	7
21	HSPO	7	7	7	7	7	7	7	7	7
22	MVSW	2	2	2	2	2	2	2	2	2
23	MVCT	7	7	7	7	7	7	7	7	7
24	MVHC	4	4	4	4	4	4	4	4	4
25	CLAL	0	0	0	0	0	0	0	0	0
26	ADPS	0	0	0	0	0	0	0	0	0
27	CLGA	2	2	2	2	2	2	2	2	2
28	YTRP	1	1	1	1	1	0	0	0	0
29	CTRP	1	1	1	1	1	0	0	0	0
30	CROF	1	1	1	1	1	1	1	1	1
31	SDLP	1	1	1	1	1	0	0	0	0
32	ROM2	0	0	0	0	0	0	0	0	0

No.	Name	PACK = 9	PACK = 10	PACK = 11	PACK = 12	PACK = 13	PACK = 14	PACK = 15
1	CLPP	28	28	28	28	28	28	28
2	SSEP	0	0	0	0	0	0	0
3	CLPG	0	0	0	0	0	0	0
4	CLPA	0	0	0	0	0	0	0
5	AFCV	1	1	1	1	1	1	1
6	HSSL	1	1	1	1	0	2	2
7	VSSL	2	2	2	2	2	2	2
8	STIP	2	2	2	2	2	2	2
9	SYLP	0	0	0	0	0	0	0
10	SYFI	1	0	1	0	0	1	1
11	AFCG	1	1	2	2	1	2	3
12	LOWG	0	0	0	0	0	1	3
13	AFCM	0	0	0	0	0	0	0
14	LOCO	0	0	0	0	0	0	0
15	HICO	0	0	0	0	0	0	0
16	CDM1	2	2	2	2	2	2	2
17	CDM2	0	0	0	0	0	0	0
18	CDM3	0	0	0	0	0	0	0
19	BGPS	10	10	10	10	10	10	10
20	VINT	7	7	7	7	7	7	7
21	HSPO	7	7	7	7	7	7	7
22	MVSW	2	2	2	2	2	2	2
23	MVCT	7	7	7	7	7	7	7
24	MVHC	4	4	4	4	4	4	4
25	CLAL	0	0	0	0	0	0	0
26	ADPS	0	0	0	0	0	0	0
27	CLGA	2	2	2	2	2	2	2
28	YTRP	1	1	1	1	0	1	1
29	CTRP	1	1	1	1	0	1	1
30	CROF	1	1	1	1	1	1	1
31	SDLP	1	1	1	1	0	1	1
32	ROM2	0	0	0	0	0	0	0

CCPM-3

Functionality		Data	Rremarks
No.	Name		
0	AD1E	0	
1	APED	*1	
2	AATK	*2	
3	AHLD	*2	
4	AARE	*2	
5	AHIS	*2	
6	DCTR	*1	
7	DCTC	*3	
8	ID1W	*4	
9	WSSO	*4	
10	SLIC	*4	
11	AWOF	*5	
12	UPAR	*5	
13	UPTH	*5	
14	X149	*5	
15	DMST	*5	
16	INST	*5	
17	UPRL	*5	
18	OFSL	*5	
19	SLOF	*5	
20	FR43	*5	
21	FRWI	*5	
22	FRTI	*5	
23	LPFL	*5	
24	4CNT	*5	
25	REFP	*5	
26	REFM	*5	
27	AWSN	*5	
28	AWRE	*5	

Standards *1

No.	Name	AD1E = 1 Or MULTI(TWIN,FAVORITES)						
		480i(RF/Video/Component480i)						
		Vivid	Standard	Pro				Reserved
				BLK Correction Off	BLK Correction L	BLK Correction M	BLK Correction H	
1	APED	2	1	0	1	2	3	1
6	DCTR	2	1	0	1	2	3	1

No.	Name	AD1E = 1 Or MULTI(TWIN,FAVORITES)						
		480p						
		Vivid	Standard	Pro				Reserved
				BLK Correction Off	BLK Correction L	BLK Correction M	BLK Correction H	
1	APED	2	1	0	1	2	3	1
6	DCTR	2	1	0	1	2	3	1

No.	Name	AD1E = 1 Or MULTI(TWIN,FAVORITES)						
		1080i/60						
		Vivid	Standard	Pro				Reserved
				BLK Correction Off	BLK Correction L	BLK Correction M	BLK Correction H	
1	APED	2	1	0	1	2	3	1
6	DCTR	2	1	0	1	2	3	1

No.	Name	AD1E = 1 Or MULTI(TWIN,FAVORITES)						
		720p/60						
		Vivid	Standard	Pro				Reserved
				BLK Correction Off	BLK Correction L	BLK Correction M	BLK Correction H	
1	APED	2	1	0	1	2	3	1
6	DCTR	2	1	0	1	2	3	1

No.	Name	AD1E = 1 Or MULTI(TWIN,FAVORITES)						
		576i						
		Vivid	Standard	Pro				Reserved
				BLK Correction Off	BLK Correction L	BLK Correction M	BLK Correction H	
1	APED	3	2	0	1	2	3	1
6	DCTR	3	2	0	1	2	3	1

No.	Name	AD1E = 1 Or MULTI(TWIN,FAVORITES)						
		576p						
		Vivid	Standard	Pro				Reserved
				BLK Correction Off	BLK Correction L	BLK Correction M	BLK Correction H	
1	APED	3	2	0	1	2	3	1
6	DCTR	3	2	0	1	2	3	1

No.	Name	AD1E = 1 Or MULTI(TWIN,FAVORITES)						
		1080i/50						
		Vivid	Standard	Pro				Reserved
				BLK Correction Off	BLK Correction L	BLK Correction M	BLK Correction H	
1	APED	3	2	0	1	2	3	1
6	DCTR	3	2	0	1	2	3	1

No.	Name	AD1E = 1 Or MULTI(TWIN,FAVORITES)						
		720p/50						
		Vivid	Standard	Pro				Reserved
				BLK Correction Off	BLK Correction L	BLK Correction M	BLK Correction H	
1	APED	3	2	0	1	2	3	1
6	DCTR	3	2	0	1	2	3	1

Standards *2

No.	Name	APED = 0	APED = 1	APED = 2	APED = 3
2	AATK	2	2	2	2
3	AHLD	2	2	2	2
4	AARE	2	2	2	2
5	AHIS	0	0	0	0

Standards *3

No.	Name	DCTR = 0	DCTR = 1	DCTR = 2	DCTR = 3
7	DCTC	2	2	2	2

Standards *4

No.	Name	UV	Video1	Video2	Video3	Video4
8	ID1W	1	1	1	1	1
9	WSSO	0	0	0	0	0
10	SLIC	5	5	5	5	5

No.	Name	Video5(COMPONENT1)		Video6(COMPONENT2)		i.LINK/ATSC for XBR(AVM(YCbCr))	
		480i	480p	480i	480p	480i	480p
8	ID1W	1	1	1	1	1	1
9	WSSO	0	0	0	0	0	0
10	SLIC	5	5	5	5	5	5

Standards *5

No.	Name	UV	Video1	Video2	Video3	Video4
11	AWOF	0	0	0	0	0
12	UPAR	0	0	0	0	0
13	UPTH	0	0	0	0	0
14	X149	0	0	0	0	0
15	DMST	1	1	1	1	1
16	INST	0	0	0	0	0
17	UPRL	1	1	1	1	1
18	OFSL	0	0	0	0	0
19	SLOF	0	0	0	0	0
20	FR43	2	2	2	2	2
21	FRWI	2	2	2	2	2
22	FRTI	2	2	2	2	2
23	LPFL	1	1	1	1	1
24	4CNT	1	1	1	1	1
25	REFP	1	1	1	1	1
26	REFM	5	5	5	5	5
27	AWSN	0	0	0	0	0
28	AWRE	0	0	0	0	0

No.	Name	Video5 480i(COMPONENT1 480i)	Video6 480i(COMPONENT2 480i)	i.LINK/ATSC for XBR 480i (AVM(YCbCr) 480i)	DVI 480i(AVM(RGB) 480i)
11	AWOF	0	0	0	0
12	UPAR	0	0	0	0
13	UPTH	0	0	0	0
14	X149	0	0	0	0
15	DMST	1	1	1	1
16	INST	0	0	0	0
17	UPRL	1	1	1	1
18	OFSL	0	0	0	0
19	SLOF	0	0	0	0
20	FR43	2	2	2	2
21	FRWI	2	2	2	2
22	FRTI	2	2	2	2
23	LPFL	1	1	1	1
24	4CNT	1	1	1	1
25	REFP	1	1	1	1
26	REFM	5	5	5	5
27	AWSN	0	0	0	0
28	AWRE	0	0	0	0

CCPM-4

Functionality No.	Name	Data	Remarks
0	CLKS	*1	
1	REFC	*1	
2	SYMD	*1	
3	SIFM	*1	
4	DTO1	*1	
5	DTO2	*1	
6	DTO3	*1	
7	PIX1	*1	
8	PIX2	*1	
9	VLN1	*1	
10	VLN2	*1	
11	SYSC	*1	
12	DSPC	*1	
13	PLLD	*1	
14	PLLR	*1	
15	DCLP	*1	
16	DCON	*1	
17	CO2P	*1	
18	CONV	*1	
19	HO2O	*1	
20	BLKM	*1	
21	OSDL	*1	
22	OSDR	*1	
23	CO2O	*1	
24	COLS	*1	
25	VFRQ	*1	
26	PLLS	*1	
27	PIFW	*1	
28	PIBW	*1	
29	PLL4	*1	
30	CDAD	*1	
31	CDAS	*1	
32	PLD1	*1	
33	PLTS	*1	
34	PLOL	*1	
35	YRND	*1	
36	CRND	*1	

Standards *1

No.	Name	UV		Video				Component, ATSC, DVI				
		3-D	2-D	3-D	2-D	YC	YC	480i	480p	1080i	720p	VGA(DVI)
0	CLKS	0	0	0	0	0	0	0	0	0	0	0
1	REFC	1	1	1	1	1	1	1	1	1	1	1
2	SYMD	0	0	0	0	5	5	8	8	8	8	8
3	SIFM	0	0	0	0	0	0	0	2	3	4	2
4	DTO1	63	63	63	63	63	63	63	63	63	63	63
5	DTO2	254	254	254	254	254	254	254	254	254	254	254
6	DTO3	86	86	86	86	86	86	86	86	86	86	86
7	PIX1	0	0	0	0	0	0	0	0	0	0	0
8	PIX2	0	0	0	0	0	0	0	0	0	0	0
9	VLN1	0	0	0	0	0	0	0	0	0	0	0
10	VLN2	0	0	0	0	0	0	0	0	0	0	0
11	SYSC	1	1	1	1	1	1	1	0	0	0	0
12	DSPC	3	3	3	3	3	3	3	1	1	1	1
13	PLLD	0	0	0	0	0	0	0	0	0	0	0
14	PLLR	1	1	1	1	1	1	1	1	1	1	1
15	DCLP	2	2	2	2	2	2	2	2	2	2	2
16	DCON	0	0	0	0	0	0	0	0	0	0	0
17	CO2P	0	0	0	0	0	0	0	0	0	0	0
18	CONV	0	0	0	0	0	0	0	0	0	0	0
19	HO2O	1	1	1	1	1	1	1	1	1	1	1
20	BLKM	1	1	1	1	1	1	1	1	1	1	1
21	OSDL	3	3	3	3	3	3	3	3	3	3	3
22	OSDR	1	1	1	1	1	1	1	1	1	1	1
23	CO2O	1	1	1	1	1	1	1	0	0	0	0
24	COLS	0	0	0	0	0	0	0	0	0	0	0
25	VFRQ	3	3	3	3	3	3	3	3	3	3	3
26	PLLS	0	0	0	0	0	0	0	0	0	0	0
27	PIFW	0	0	0	0	0	0	0	0	0	0	0
28	PIBW	0	0	0	0	0	0	0	0	0	0	0
29	PLL4	0	0	0	0	0	0	0	0	0	0	0
30	CDAD	0	0	0	0	0	0	0	0	0	0	0
31	CDAS	0	0	0	0	0	0	0	0	0	0	0
32	PLD1	0	0	0	0	0	0	0	0	0	0	0
33	PLTS	0	0	0	0	0	0	0	0	0	0	0
34	PLOL	0	0	0	0	0	0	0	0	0	0	0
35	YRND	1	1	1	1	1	1	1	1	1	1	1
36	CRND	1	1	1	1	1	1	1	1	1	1	1

No.	Name	BS/DTT YC	BS/DTT				MS/CNM for XBR	MS/CNM for WE to CCPS
			480i	480p	1080i	720p		
0	CLKS	0	5	5	5	5	0	4
1	REFC	1	1	1	1	1	1	1
2	SYMD	5	14	14	14	14	8	12
3	SIFM	0	0	2	3	4	3	15
4	DTO1	63	63	63	63	63	63	63
5	DTO2	254	254	254	254	254	254	254
6	DTO3	86	86	86	86	86	86	86
7	PIX1	0	0	0	0	0	0	255
8	PIX2	0	0	0	0	0	0	15
9	VLN1	0	0	0	0	0	0	0
10	VLN2	0	0	0	0	0	0	64
11	SYSC	1	1	0	0	0	0	0
12	DSPC	3	2	0	0	0	1	0
13	PLLD	0	0	0	0	0	0	0
14	PLLR	1	2	1	1	1	1	1
15	DCLP	2	2	2	2	2	2	2
16	DCON	0	0	0	0	0	0	0
17	CO2P	0	0	0	0	0	0	0
18	CONV	0	0	0	0	0	0	0
19	HO2O	0	0	0	0	0	1	0
20	BLKM	1	1	1	1	1	1	1
21	OSDL	3	3	3	3	3	3	3
22	OSDR	1	1	1	1	1	1	1
23	CO2O	0	0	0	0	0	0	0
24	COLS	0	0	0	0	0	0	0
25	VFRQ	3	3	3	3	3	3	3
26	PLLS	0	0	0	0	0	0	0
27	PIFW	0	0	0	0	0	0	0
28	PIBW	0	0	0	0	0	0	0
29	PLL4	0	0	0	0	0	0	0
30	CDAD	0	0	0	0	0	0	0
31	CDAS	0	0	0	0	0	0	0
32	PLD1	0	0	0	0	0	0	0
33	PLTS	0	0	0	0	0	0	0
34	PLOL	0	0	0	0	0	0	0
35	YRND	1	1	1	1	1	1	1
36	CRND	1	1	1	1	1	1	1

CCPM-5

Functionality		Data		Rremarks
No.	Name	UV	Video	
0	NSS	8	8	
1	TESS	0	0	
2	NSC	15	15	
3	NSV	1	1	
4	STDH	2	2	
5	SHH	1	1	

CCPM-6

Functionality		Data		Rremarks
No.	Name	UV	Video	
0	MC1	4	4	
1	MC2	3	3	
2	CR1	1	1	
3	CR2	1	1	
4	CR3	0	0	
5	CR4	1	1	
6	CCR	2	2	
7	CHED	2	2	
8	CVED	3	3	
9	CR5	4	4	
10	YFLT	4	4	
11	C3LE	1	1	
12	YMFH	3	3	
13	YMFV	1	1	
14	F2SW	0	0	
15	MO1	15	15	
16	MO2	3	3	
17	MNNR	1	1	
18	DTH	2	2	
19	DTV	2	2	
20	DT2D	2	2	
21	DTHP	3	3	
22	DTCR	4	4	
23	D2FC	3	3	
24	D2F	9	9	
25	D2F2	1	1	
26	D2FL	0	0	
27	DC	0	0	
28	CVFT	3	3	
29	HC2F	1	1	
30	MNSW	0	0	
31	MDYB	0	0	
32	LCBP	2	2	
33	BPSE	1	1	
34	CR2H	0	0	
35	IMPR	3	3	
36	IMPS	1	1	
37	IMPL	0	0	
38	PLPL	1	1	
39	MDYE	3	3	
40	PLCL	1	1	
41	BPL2	1	1	
42	HPL	1	1	
43	CVFP	0	0	
44	BPL3	7	7	
45	D2F3	2	2	
46	LPSW	1	1	
47	LCR	1	1	
48	F2CR	1	1	
49	YIR	1	1	
50	MOMO	0	0	

CCPM-7

Functionality		Data		R remarks
No.	Name	UV/Video		
		STANDARD	NOT STANDARD	
0	SCTP	0	2	
1	CYBP	0	0	
2	Y2BP	0	0	
3	C2LE	1	1	
4	DTCN	1	2	
5	VEDL	3	3	
6	HP	2	2	
7	PNR	0	0	
8	NCDT	0	0	
9	H2DD	0	0	
10	THRU	0	0	
11	MCH	15	15	
12	MCV	1	1	
13	PEDS	0	0	
14	MMK	7	7	
15	MKAM	0	0	
16	HGLT	0	0	
17	TESL	0	0	
18	SDOF	0	0	
19	BPOF	1	1	
20	C1L	1	1	
21	CYV	0	0	
22	PAL3	0	0	

CCPM-8

Functionality		Data	Rremarks
No.	Name		
0	VECR	*1	
1	VECL	*1	
2	VECN	*1	
3	VEGA	*1	

Standards *1

No.	Name	UV				Video			
		Vivid	Standard	Pro	Reserved	Vivid	Standard	Pro	Reserved
0	VECR	0	0	0	0	0	0	0	0
1	VECL	0	0	0	0	0	0	0	0
2	VECN	2	2	2	2	2	2	2	2
3	VEGA	0	0	0	0	0	0	0	0

CCPM-9

Functionality		Data	Rremarks
No.	Name		
0	RNRL	*1	
1	NYLP	*2	
2	NYG	*2	
3	NYPH	*2	
4	NYLM	*2	
5	NCLP	*2	
6	NGC	*2	
7	NCPH	*2	
8	NCLM	*2	
9	RNRM	*1	

Standards *1

No.	Name	UV				Video			
		Vivid	Standard	Pro	Mild	Vivid	Standard	Pro	Mild
0	RNRL	0	0	0	0	0	0	0	0
9	RNRM	0	0	0	0	0	0	0	0

No.	Name	Component(AVM(YCbCr))							
		480i				480p			
		Vivid	Standard	Pro	Mild	Vivid	Standard	Pro	Mild
0	RNRL	0	0	0	0	0	0	0	0
9	RNRM	0	0	0	0	0	0	0	0

No.	Name	Component(AVM(YCbCr))							
		1080i				720p			
		Vivid	Standard	Pro	Mild	Vivid	Standard	Pro	Mild
0	RNRL	0	0	0	0	0	0	0	0
9	RNRM	0	0	0	0	0	0	0	0

No.	Name	DVI(AVM(RGB)/DVI)							
		480i				480p			
		Vivid	Standard	Pro	Mild	Vivid	Standard	Pro	Mild
0	RNRL	0	0	0	0	0	0	0	0
9	RNRM	0	0	0	0	0	0	0	0

No.	Name	DVI(AVM(RGB)/DVI)							
		1080i				720p			
		Vivid	Standard	Pro	Mild	Vivid	Standard	Pro	Mild
0	RNRL	0	0	0	0	0	0	0	0
9	RNRM	0	0	0	0	0	0	0	0

No.	Name	DVI(AVM(RGB)/DVI)			
		VGA(VGA/OTHER)			
		Vivid	Standard	Pro	Mild
0	RNRL	0	0	0	0
9	RNRM	0	0	0	0

No.	Name	i.LINK(ex DV) for XBR(BS/CS/i.LINK(ex DV))							
		480i				480p			
		Vivid	Standard	Pro	Mild	Vivid	Standard	Pro	Mild
0	RNRL	0	0	0	0	0	0	0	0
9	RNRM	0	0	0	0	0	0	0	0

No.	Name	i.LINK(ex DV) for XBR(BS/CS/i.LINK(ex DV))							
		1080i				720p			
		Vivid	Standard	Pro	Mild	Vivid	Standard	Pro	Mild
0	RNRL	0	0	0	0	0	0	0	0
9	RNRM	0	0	0	0	0	0	0	0

No.	Name	BS/CS/i.LINK(ex DV)				i.LINK(DV)			
		Lower							
		Vivid	Standard	Pro	Mild	Vivid	Standard	Pro	Mild
0	RNRL	0	0	0	0	0	0	0	0
9	RNRM	0	0	0	0	0	0	0	0

No.	Name	ATSC(DTT/ATSC)							
		480i				480p			
		Vivid	Standard	Pro	Mild	Vivid	Standard	Pro	Mild
0	RNRL	0	0	0	0	0	0	0	0
9	RNRM	0	0	0	0	0	0	0	0

No.	Name	ATSC(DTT/ATSC)							
		1080i				720p			
		Vivid	Standard	Pro	Mild	Vivid	Standard	Pro	Mild
0	RNRL	0	0	0	0	0	0	0	0
9	RNRM	0	0	0	0	0	0	0	0

No.	Name	ATSC(DTT/ATSC)			
		Lower			
		Vivid	Standard	Pro	Mild
0	RNRL	0	0	0	0
9	RNRM	0	0	0	0

No.	Name	MS for XBR(DATA(ADD))							
		STILL(1080i)(480i)				M OVIE(CONT-PANEL)(OTHER)			
		Vivid	Standard	Pro	Mild	Vivid	Standard	Pro	Mild
0	RNRL	0	0	0	0	0	0	0	0
9	RNRM	0	0	0	0	0	0	0	0

No.	Name	MS for XBR(DATA(IND.))							
		MOVIE(LQ)(480i)				M OVIE(HQ)(OTHER)			
		Vivid	Standard	Pro	Mild	Vivid	Standard	Pro	Mild
0	RNRL	0	0	0	0	0	0	0	0
9	RNRM	0	0	0	0	0	0	0	0

Standards *2

No.	Name	RNRL = 0	RNRL = 1	RNRL = 2	RNRL = 3	RNRL = 4	RNRL = 5	RNRL = 6	RNRL = 7
1	NYLP	0	0	0	0	0	0	0	0
2	NYG	1	1	1	1	1	1	1	1
3	NYPH	13	13	13	13	13	13	13	13
4	NYLM	0	1	4	6	8	10	12	14
5	NCLP	0	0	0	0	0	0	0	0
6	NGC	1	1	1	1	1	1	1	1
7	NCPH	13	13	13	13	13	13	13	13
8	NCLM	0	1	4	6	8	10	12	14

CCPM-10

Functionality		Data	Rremarks
No.	Name		
0	BNRL	*1	
1	EDL	*2	
2	LFL	*2	
3	DCT	*2	
4	BLEV	*2	
5	DNE	*2	
6	MRON	*2	
7	FMOD	*2	
8	BNRM	*1	

Standards *1

No.	Name	UV				Video			
		Vivid	Standard	Pro	Mild	Vivid	Standard	Pro	Mild
0	BNRL	0	0	0	0	0	0	0	0
8	BNRM	0	0	0	0	0	0	0	0

No.	Name	Component(AVM(YCbCr))							
		480i				480p			
		Vivid	Standard	Pro	Mild	Vivid	Standard	Pro	Mild
0	BNRL	0	0	0	0	0	0	0	0
8	BNRM	0	0	0	0	0	0	0	0

No.	Name	Component(AVM(YCbCr))							
		1080i				720p			
		Vivid	Standard	Pro	Mild	Vivid	Standard	Pro	Mild
0	BNRL	0	0	0	0	0	0	0	0
8	BNRM	0	0	0	0	0	0	0	0

No.	Name	DVI(AVM(RGB)/DVI)							
		480i				480p			
		Vivid	Standard	Pro	Mild	Vivid	Standard	Pro	Mild
0	BNRL	0	0	0	0	0	0	0	0
8	BNRM	0	0	0	0	0	0	0	0

No.	Name	DVI(AVM(RGB)/DVI)							
		1080i				720p			
		Vivid	Standard	Pro	Mild	Vivid	Standard	Pro	Mild
0	BNRL	0	0	0	0	0	0	0	0
8	BNRM	0	0	0	0	0	0	0	0

No.	Name	DVI(AVM(RGB)/DVI)			
		VGA(VGA/OTHER)			
		Vivid	Standard	Pro	Mild
0	BNRL	0	0	0	0
8	BNRM	0	0	0	0

No.	Name	i.LINK(ex DV) for XBR(BS/CS/i.LINK(ex DV))							
		480i				480p			
		Vivid	Standard	Pro	Mild	Vivid	Standard	Pro	Mild
0	BNRL	0	0	0	0	0	0	0	0
8	BNRM	0	0	0	0	0	0	0	0

No.	Name	i.LINK(ex DV) for XBR(BS/CS/i.LINK(ex DV))							
		1080i				720p			
		Vivid	Standard	Pro	Mild	Vivid	Standard	Pro	Mild
0	BNRL	0	0	0	0	0	0	0	0
8	BNRM	0	0	0	0	0	0	0	0

No.	Name	BS/CS/i.LINK(ex DV)				i.LINK(DV)			
		Lower							
		Vivid	Standard	Pro	Mild	Vivid	Standard	Pro	Mild
0	BNRL	0	0	0	0	0	0	0	0
8	BNRM	0	0	0	0	0	0	0	0

No.	Name	ATSC(DTT/ATSC)							
		480i				480p			
		Vivid	Standard	Pro	Mild	Vivid	Standard	Pro	Mild
0	BNRL	0	0	0	0	0	0	0	0
8	BNRM	0	0	0	0	0	0	0	0

No.	Name	ATSC(DTT/ATSC)							
		1080i				720p			
		Vivid	Standard	Pro	Mild	Vivid	Standard	Pro	Mild
0	BNRL	0	0	0	0	0	0	0	0
8	BNRM	0	0	0	0	0	0	0	0

No.	Name	ATSC(DTT/ATSC)			
		Lower			
		Vivid	Standard	Pro	Mild
0	BNRL	0	0	0	0
8	BNRM	0	0	0	0

No.	Name	MS for XBR(DATA(ADD))							
		STILL(1080i)(480i)				MOVIE(CONT-PANEL)(OTHER)			
		Vivid	Standard	Pro	Mild	Vivid	Standard	Pro	Mild
0	BNRL	0	0	0	0	0	0	0	0
8	BNRM	0	0	0	0	0	0	0	0

No.	Name	MS for XBR(DATA(IND.))							
		MOVIE(LQ)(480i)				M OVIE(HQ)(OTHER)			
		Vivid	Standard	Pro	Mild	Vivid	Standard	Pro	Mild
0	BNRL	0	0	0	0	0	0	0	0
8	BNRM	0	0	0	0	0	0	0	0

Standards *2

No.	Name	BNRL = 0	BNRL = 1	BNRL = 2	BNRL = 3	BNRL = 4	BNRL = 5	BNRL = 6	BNRL = 7
1	EDL	2	2	2	2	2	2	2	2
2	LFL	2	2	2	2	2	2	2	2
3	DCT	2	2	2	2	2	2	2	2
4	BLEV	0	1	2	3	4	5	6	7
5	DNE	1	1	1	1	1	1	1	1
6	MRON	0	0	0	0	0	0	0	0
7	FMOD	0	0	0	0	0	0	0	0

CH-SET

Functionality		Data	Rremarks
No.	Name		
0	PKNO	*1	
1	CHNL	*1	
2	HOFS	*1	
3	PACK	*1	

Standards *1

No.	Name	PKNO = 0	PKNO = 1	PKNO = 2	PKNO = 3	PKNO = 4	PKNO = 5	PKNO = 6	PKNO = 7
0	PKNO	0	1	2	3	4	5	6	7
1	CHNL	0	0	0	0	0	0	0	0
2	HOFS	7	7	7	7	7	7	7	7
3	PACK	0	0	0	0	0	0	0	0

CCPS-1

Functionality		Data	Remarks
No.	Name		
0	SHPC	*1	
1	FUP2	*1	
2	YNR	*1	
3	CNR	*1	
4	SSHP	*1	
5	YEQ	*1	
6	SHF0	*1	
7	SECA	*2	
8	YCDL	*3	
9	YLEV	*3	
10	CLEV	*3	
11	SHUE	*4	
12	CEQ	*4	
13	CBPF	*4	
14	CBPA	*4	
15	KILV	*4	
16	APGA	*4	
17	NCOM	*4	

Standards *1

No.	Name	UV				Video			
		Vivid	Standard	Pro	Reserved	Vivid	Standard	Pro	Reserved
0	SHPC	0	0	0	0	0	0	0	0
1	FUP2	0	0	0	0	0	0	0	0
2	YNR	0	0	0	0	0	0	0	0
3	CNR	0	0	0	0	0	0	0	0
4	SSHP	4	4	4	7	7	7	7	7
5	YEQ	3	3	3	3	3	3	3	3
6	SHF0	1	1	1	1	1	1	1	1

No.	Name	BS(ANALOG)				DTT(ANALOG)			
		Vivid	Standard	Pro	Mild	Vivid	Standard	Pro	Mild
0	SHPC	0	0	0	0	0	0	0	0
1	FUP2	0	0	0	0	0	0	0	0
2	YNR	0	0	0	0	0	0	0	0
3	CNR	0	0	0	0	0	0	0	0
4	SSHP	7	7	7	7	7	7	7	7
5	YEQ	3	3	3	3	3	3	3	3
6	SHF0	1	1	1	1	1	1	1	1

No.	Name	MS for WE(MS/CNM)							
		STILL(1080i)				MOVIE(CONT-PANEL)			
		Vivid	Standard	Pro	Reserved	Vivid	Standard	Pro	Reserved
0	SHPC	0	0	0	0	0	0	0	0
1	FUP2	0	0	0	0	0	0	0	0
2	YNR	0	0	0	0	0	0	0	0
3	CNR	0	0	0	0	0	0	0	0
4	SSHP	7	7	7	7	7	7	7	7
5	YEQ	3	3	3	3	3	3	3	3
6	SHF0	1	1	1	1	1	1	1	1

No.	Name	MS for WE(MS/CNM)							
		MOVIE(LQ)				MOVIE(HQ)			
		Vivid	Standard	Pro	Reserved	Vivid	Standard	Pro	Mild
0	SHPC	0	0	0	0	0	0	0	0
1	FUP2	0	0	0	0	0	0	0	0
2	YNR	0	0	0	0	0	0	0	0
3	CNR	0	0	0	0	0	0	0	0
4	SSHP	7	7	7	7	7	7	7	7
5	YEQ	3	3	3	3	3	3	3	3
6	SHF0	1	1	1	1	1	1	1	1

Standards *2

No.	Name	UV	Video
7	SECA	10	10

No.	Name	COMPONENT/AVM(YCbCr)				AVM(RGB)/DVI				
		480i	480p	1080i	720p	480i	480p	1080i	720p	VGA/OTHER
7	SECA	0	0	0	0	0	0	0	0	0

No.	Name	BS/i.LINK					i.LINK(DV)
		480i	480p	1080i	720p	Lower	
7	SECA	0	0	0	0	0	0

No.	Name	DTT/ATSC				
		480i	480p	1080i	720p	Lower
7	SECA	0	0	0	0	0

No.	Name	DATA(ADD)		DATA(IND.)	
		480i	OTHER	480i	OTHER
7	SECA	0	0	0	0

Standards *3

No.	Name	UV	Video	BS(ANALOG)	DTT(ANALOG)	MS for WE(MS/CNM)			
						STILL(1080i)	MOVIE(CONT-PANEL)	MOVIE(LQ)	MOVIE(HQ)
8	YCDL	8	8	7	7	7	7	7	7
9	YLEV	175	169	194	194	128	128	128	160
10	CLEV	109	98	100	100	128	128	128	100

Standards *4

No.	Name	UV	Video	BS(ANALOG)	DTT(ANALOG)
11	SHUE	12	6	7	7
12	CEQ	3	0	0	0
13	CBPF	3	0	0	0
14	CBPA	0	1	1	1
15	KILV	2	2	2	2
16	APGA	0	1	0	0
17	NCOM	1	0	0	0

CCPS-2

Functionality		Data	Rremarks
No.	Name		
0	SHPC	*1	

Standards *1

No.	Name	UV	Video1	Video2	Video3	Video4	BS	DTT
0	PACK	0	4	4	4	4	14	15

CCPS-3

Functionality		Data	Rremarks
No.	Name		
0	AD1E	0	
1	APED	*1	
2	AATK	*2	
3	AHLD	*2	
4	AARE	*2	
5	AHIS	*2	
6	DCTR	*1	
7	DCTC	*3	
8	ID1W	*4	
9	WSSO	*4	
10	SLIC	*4	
11	AWOF	*5	
12	UPAR	*5	
13	UPTH	*5	
14	X149	*5	
15	DMST	*5	
16	INST	*5	
17	UPRL	*5	
18	OFSL	*5	
19	SLOF	*5	
20	FR43	*5	
21	FRWI	*5	
22	FRTI	*5	
23	LPFL	*5	
24	4CNT	*5	
25	REFP	*5	
26	REFM	*5	
27	AWSN	*5	
28	AWRE	*5	

Standards *1

No.	Name	AD1E = 1 Or MULTI(TWIN,FAVORITES)						
		480i (RF/Video/Component480i)						
		Vivid	Standard	Pro				Reserved
				BLK Correction Off	BLK Correction L	BLK Correction M	BLK Correction H	
1	APED	2	1	0	1	2	3	1
6	DCTR	2	1	0	1	2	3	1

No.	Name	AD1E = 1 Or MULTI(TWIN,FAVORITES)						
		480p						
		Vivid	Standard	Pro				Reserved
				BLK Correction Off	BLK Correction L	BLK Correction M	BLK Correction H	
1	APED	2	1	0	1	2	3	1
6	DCTR	2	1	0	1	2	3	1

No.	Name	AD1E = 1 Or MULTI(TWIN,FAVORITES)						
		1080i/60						
		Vivid	Standard	Pro				Reserved
				BLK Correction Off	BLK Correction L	BLK Correction M	BLK Correction H	
1	APED	2	1	0	1	2	3	1
6	DCTR	2	1	0	1	2	3	1

No.	Name	AD1E = 1 Or MULTI(TWIN,FAVORITES)						
		720p/60						
		Vivid	Standard	Pro				Reserved
				BLK Correction Off	BLK Correction L	BLK Correction M	BLK Correction H	
1	APED	2	1	0	1	2	3	1
6	DCTR	2	1	0	1	2	3	1

No.	Name	AD1E = 1 Or MULTI(TWIN,FAVORITES)						
		576i						
		Vivid	Standard	Pro				Reserved
				BLK Correction Off	BLK Correction L	BLK Correction M	BLK Correction H	
1	APED	3	2	0	1	2	3	1
6	DCTR	3	2	0	1	2	3	1

No.	Name	AD1E = 1 Or MULTI(TWIN,FAVORITES)						
		576p						
		Vivid	Standard	Pro				Reserved
				BLK Correction Off	BLK Correction L	BLK Correction M	BLK Correction H	
1	APED	3	2	0	1	2	3	1
6	DCTR	3	2	0	1	2	3	1

No.	Name	AD1E = 1 Or MULTI(TWIN,FAVORITES)						
		1080i/50						
		Vivid	Standard	Pro				Reserved
				BLK Correction Off	BLK Correction L	BLK Correction M	BLK Correction H	
1	APED	3	2	0	1	2	3	1
6	DCTR	3	2	0	1	2	3	1

No.	Name	AD1E = 1 Or MULTI(TWIN,FAVORITES)						
		720p/50						
		Vivid	Standard	Pro				Reserved
				BLK Correction Off	BLK Correction L	BLK Correction M	BLK Correction H	
1	APED	3	2	0	1	2	3	1
6	DCTR	3	2	0	1	2	3	1

Standards *2

No.	Name	APED = 0	APED = 1	APED = 2	APED = 3
2	AATK	2	2	2	2
3	AHLD	2	2	2	2
4	AARE	2	2	2	2
5	AHIS	0	0	0	0

Standards *3

No.	Name	DCTR = 0	DCTR = 1	DCTR = 2	DCTR = 3
7	DCTC	2	2	2	2

Standards *4

No.	Name	UV	Video1	Video2	Video3	Video4
8	ID1W	1	1	1	1	1
9	WSSO	0	0	0	0	0
10	SLIC	5	5	5	5	5

No.	Name	Video5(COMPONENT1)		Video6(COMPONENT2)		i.LINK/ATSC for XBR (AVM (YCb Cr))	
		480i	480p	480i	480p	480i	480p
8	ID1W	1	1	1	1	1	1
9	WSSO	0	0	0	0	0	0
10	SLIC	5	5	5	5	5	5

Standards *5

No.	Name	UV	Video1	Video2	Video3	Video4	Video5 480i(COMPONENT1 480i)	Video6 480i(COMPONENT2 480i)	i.LINK/ATSC for XBR 480i (AVM(YCbCr) 480i)
11	AWOF	0	0	0	0	0	0	0	0
12	UPAR	0	0	0	0	0	0	0	0
13	UPTH	0	0	0	0	0	0	0	0
14	X149	0	0	0	0	0	0	0	0
15	DMST	1	1	1	1	1	1	1	1
16	INST	0	0	0	0	0	0	0	0
17	UPRL	1	1	1	1	1	1	1	1
18	OFSL	0	0	0	0	0	0	0	0
19	SLOF	0	0	0	0	0	0	0	0
20	FR43	2	2	2	2	2	2	2	2
21	FRWI	2	2	2	2	2	2	2	2
22	FRTI	2	2	2	2	2	2	2	2
23	LPFL	1	1	1	1	1	1	1	1
24	4CNT	1	1	1	1	1	1	1	1
25	REFP	7	7	7	7	7	7	7	7
26	REFM	7	7	7	7	7	7	7	7
27	AWSN	0	0	0	0	0	0	0	0
28	AWRE	0	0	0	0	0	0	0	0

CCPS-4

Functionality No.	Name	Data	Rremarks
0	CLKS	*1	
1	REFC	*1	
2	SYMD	*1	
3	SIFM	*1	
4	DTO1	*1	
5	DTO2	*1	
6	DTO3	*1	
7	PIX1	*1	
8	PIX2	*1	
9	VLN1	*1	
10	VLN2	*1	
11	SYSC	*1	
12	DSPC	*1	
13	PLLD	*1	
14	PLLR	*1	
15	DCLP	*1	
16	DCON	*1	
17	CO2P	*1	
18	CONV	*1	
19	HO2O	*1	
20	BLKM	*1	
21	OSDL	*1	
22	OSDR	*1	
23	CO2O	*1	
24	COLS	*1	
25	VFRQ	*1	
26	PLLS	*1	
27	PIFW	*1	
28	PIBW	*1	
29	PLL4	*1	
30	CDAD	*1	
31	CDAS	*1	
32	PLD1	*1	
33	PLTS	*1	
34	PLOL	*1	
35	YRND	*1	
36	CRND	*1	

Standards *1

No.	Name	UV		VIDEO				ANALOG COMPONENT				
		3-D	2-D	3-D	2-D	YC	YC	480i	480p	1080i	720p	VGA(DVI)
0	CLKS	0	0	0	0	0	0	0	0	0	0	0
1	REFC	1	1	1	1	1	1	1	1	1	1	1
2	SYMD	0	0	0	0	5	5	8	8	8	8	8
3	SIFM	0	0	0	0	0	0	0	2	3	4	6
4	DTO1	63	63	63	63	63	63	63	63	63	63	63
5	DTO2	254	254	254	254	254	254	254	254	254	254	254
6	DTO3	86	86	86	86	86	86	86	86	86	86	86
7	PIX1	0	0	0	0	0	0	0	0	0	0	49
8	PIX2	0	0	0	0	0	0	0	0	0	0	15
9	VLN1	0	0	0	0	0	0	0	0	0	0	2
10	VLN2	0	0	0	0	0	0	0	0	0	0	13
11	SYSC	1	1	1	1	1	1	1	0	0	0	0
12	DSPC	3	3	3	3	3	3	3	1	1	1	1
13	PLLD	0	0	0	0	0	0	0	0	0	0	0
14	PLLR	1	1	1	1	1	1	1	1	1	1	1
15	DCLP	2	2	2	2	2	2	2	2	2	2	2
16	DCON	0	0	0	0	0	0	0	0	0	0	0
17	CO2P	0	0	0	0	0	0	0	0	0	0	0
18	CONV	0	0	0	0	0	0	0	0	0	0	0
19	HO2O	1	1	1	1	1	1	1	0	0	0	0
20	BLKM	1	1	1	1	1	1	1	1	1	1	1
21	OSDL	3	3	3	3	3	3	3	3	3	3	3
22	OSDR	1	1	1	1	1	1	1	1	1	1	1
23	CO2O	1	1	1	1	1	1	1	0	0	0	0
24	COLS	0	0	0	0	0	0	0	0	0	0	0
25	VFRQ	3	3	3	3	3	3	3	3	3	3	3
26	PLLS	0	0	0	0	0	0	0	0	0	0	0
27	PIFW	0	0	0	0	0	0	0	0	0	0	0
28	PIBW	0	0	0	0	0	0	0	0	0	0	0
29	PLL4	0	0	0	0	0	0	0	0	0	0	0
30	CDAD	0	0	0	0	0	0	0	0	0	0	0
31	CDAS	0	0	0	0	0	0	0	0	0	0	0
32	PLD1	0	0	0	0	0	0	0	0	0	0	0
33	PLTS	0	0	0	0	0	0	0	0	0	0	0
34	PLOL	0	0	0	0	0	0	0	0	0	0	0
35	YRND	1	1	1	1	1	1	1	1	1	1	1
36	CRND	1	1	1	1	1	1	1	1	1	1	1

No.	Name	BS/DTT YC	BS/DTT DIGITAL COMPONENT				MS/CNM for WE
			480i	480p	1080i	720p	
0	CLKS	0	5	5	5	5	4
1	REFC	1	1	1	1	1	1
2	SYMD	5	14	14	14	14	12
3	SIFM	0	0	2	3	4	15
4	DTO1	63	63	63	63	63	63
5	DTO2	254	254	254	254	254	254
6	DTO3	86	86	86	86	86	86
7	PIX1	0	0	0	0	0	255
8	PIX2	0	0	0	0	0	15
9	VLN1	0	0	0	0	0	0
10	VLN2	0	0	0	0	0	64
11	SYSC	1	1	0	0	0	0
12	DSPC	3	2	0	0	0	0
13	PLLD	0	0	0	0	0	0
14	PLLR	1	2	1	1	1	1
15	DCLP	2	2	2	2	2	2
16	DCON	0	0	0	0	0	0
17	CO2P	0	0	0	0	0	0
18	CONV	0	0	0	0	0	0
19	HO2O	0	0	0	0	0	0
20	BLKM	1	1	1	1	1	1
21	OSDL	3	3	3	3	3	3
22	OSDR	1	1	1	1	1	1
23	CO2O	0	0	0	0	0	0
24	COLS	0	0	0	0	0	0
25	VFRQ	3	3	3	3	3	3
26	PLLS	0	0	0	0	0	0
27	PIFW	0	0	0	0	0	0
28	PIBW	0	0	0	0	0	0
29	PLL4	0	0	0	0	0	0
30	CDAD	0	0	0	0	0	0
31	CDAS	0	0	0	0	0	0
32	PLD1	0	0	0	0	0	0
33	PLTS	0	0	0	0	0	0
34	PLOL	0	0	0	0	0	0
35	YRND	1	1	1	1	1	1
36	CRND	1	1	1	1	1	1

CCPS-5

Functionality		Data		Rremarks
No.	Name	UV	Video	
0	NSS	8	8	
1	TESS	0	0	
2	NSC	15	15	
3	NSV	1	1	
4	STDH	2	2	
5	SHH	1	1	

CCPS-6

Functionality		Data		Rremarks
No.	Name	UV	Video	
0	MC1	4	4	
1	MC2	3	3	
2	CR1	1	1	
3	CR2	1	1	
4	CR3	0	0	
5	CR4	1	1	
6	CCR	2	2	
7	CHED	2	2	
8	CVED	3	3	
9	CR5	4	4	
10	YFLT	4	4	
11	C3LE	1	1	
12	YMFH	3	3	
13	YMFV	1	1	
14	F2SW	0	0	
15	MO1	15	15	
16	MO2	3	3	
17	MNNR	1	1	
18	DTH	2	2	
19	DTV	2	2	
20	DT2D	2	2	
21	DTHP	3	3	
22	DTCR	4	4	
23	D2FC	3	3	
24	D2F	9	9	
25	D2F2	1	1	
26	D2FL	0	0	
27	DC	0	0	
28	CVFT	3	3	
29	HC2F	1	1	
30	MNSW	0	0	
31	MDYB	0	0	
32	LCBP	2	2	
33	BPSE	1	1	
34	CR2H	0	0	
35	IMPR	3	3	
36	IMPS	1	1	
37	IMPL	0	0	
38	PLPL	1	1	
39	MDYE	3	3	
40	PLCL	1	1	
41	BPL2	1	1	
42	HPL	1	1	
43	CVFP	0	0	
44	BPL3	7	7	
45	D2F3	2	2	
46	LPSW	1	1	
47	LCR	1	1	
48	F2CR	1	1	
49	YIR	1	1	
50	MOMO	0	0	

CCPS-7

Functionality		Data	Remarks
No.	Name		
0	SCTP	0	
1	CYBP	0	
2	Y2BP	0	
3	C2LE	1	
4	DTCN	1	
5	VEDL	3	
6	HP	2	
7	PNR	0	
8	NCDT	0	
9	H2DD	0	
10	THRU	1	
11	MCH	15	
12	MCV	1	
13	PEDS	0	
14	MMK	7	
15	MKAM	1	
16	HGLT	0	
17	TESL	0	
18	SDOF	1	
19	BPOF	1	
20	C1L	1	
21	CYV	0	
22	PAL3	0	

CCPS-8

Functionality		Data	Rremarks
No.	Name		
0	VECR	*1	
1	VECL	*1	
2	VECN	*1	
3	VEGA	*1	

Standards *1

No.	Name	UV				Video			
		Vivid	Standard	Pro	Reserved	Vivid	Standard	Pro	Reserved
0	VECR	0	0	0	0	0	0	0	0
1	VECL	0	0	0	0	0	0	0	0
2	VECN	2	2	2	2	2	2	2	2
3	VEGA	0	0	0	0	0	0	0	0

No.	Name	BS(ANALOG)				DTT(ANALOG)			
		Vivid	Standard	Pro	Reserved	Vivid	Standard	Pro	Reserved
0	VECR	0	0	0	0	0	0	0	0
1	VECL	0	0	0	0	0	0	0	0
2	VECN	2	2	2	2	2	2	2	2
3	VEGA	0	0	0	0	0	0	0	0

CCPS-10

Functionality		Data	Rremarks
No.	Name		
0	BNRL	*1	
1	EDL	*2	
2	LFL	*2	
3	DCT	*2	
4	BLEV	*2	
5	DNE	*2	
6	MRON	*2	
7	FMOD	*2	
8	BNRM	*1	

Standards *1

No.	Name	UV				Video			
		Vivid	Standard	Pro	Mild	Vivid	Standard	Pro	Mild
0	BNRL	0	0	0	0	0	0	0	0
8	BNRM	0	0	0	0	0	0	0	0

No.	Name	BS				DTT			
		Vivid	Standard	Pro	Mild	Vivid	Standard	Pro	Mild
0	BNRL	0	0	0	0	0	0	0	0
8	BNRM	0	0	0	0	0	0	0	0

No.	Name	MS for WE(MS/CNM)							
		STILL(1080i)				MOVIE(CONT-PANEL)			
		Vivid	Standard	Pro	Mild	Vivid	Standard	Pro	Mild
0	BNRL	0	0	0	0	0	0	0	0
8	BNRM	0	0	0	0	0	0	0	0

No.	Name	MS for WE(MS/CNM)							
		MOVIE(LQ)				M	OVIE(HQ)		
		Vivid	Standard	Pro	Mild	Vivid	Standard	Pro	Mild
0	BNRL	0	0	0	0	0	0	0	0
8	BNRM	0	0	0	0	0	0	0	0

Standards *2

No.	Name	BNRL = 0	BNRL = 1	BNRL = 2	BNRL = 3	BNRL = 4	BNRL = 5	BNRL = 6	BNRL = 7
1	EDL	2	2	2	2	2	2	2	2
2	LFL	2	2	2	2	2	2	2	2
3	DCT	2	2	2	2	2	2	2	2
4	BLEV	0	1	2	3	4	5	6	7
5	DNE	1	1	1	1	1	1	1	1
6	MRON	0	0	0	0	0	0	0	0
7	FMOD	0	0	0	0	0	0	0	0

DCP-INT

Functionality		Data	Remarks
No.	Name		
0	DENC	1	
1	DENG	0	
2	EO1C	1	
3	EO2C	0	
4	EO1H	0	
5	EO2H	0	
6	POFF	0	
7	O1TM	0	
8	YCFS	0	
9	RN8Y	1	
10	HINV	0	
11	VINV	0	
12	CDEM	1	
13	CPOL	0	
14	OFST	*1	
15	TCOF	0	
16	CINT	0	
17	RN8C	1	
18	DMTR	0	
19	MTRX	1	
20	OSDE	1	
21	MUX	1	
22	EXMT	1	
23	EXOF	0	
24	GON	1	
25	BON	1	
26	RON	1	
27	BKOF	0	
28	AGIW	0	
29	AGIB	0	
30	HFIN	0	
31	VFIN	0	
32	CFDM	0	
33	CFCP	0	
34	YFOF	0	
35	CFOF	0	
36	CFIP	0	
37	R8CF	0	
38	MATF	1	
39	GLMT	15	
40	WBSW	0	
41	OENG	0	
42	RFRM	1	
43	GHPL	1	
44	GVPL	1	
45	GBPL	0	

Standards *1

No.	Name	MS/MPEG 4	CNM(not MPEG4)	Others	Standby
14	OFST	0	0	0	0

DCP-OSD

Functionality		Data	Rremarks
No.	Name		
0	HPL1	0	
1	VPL1	0	
2	HPL2	0	
3	VPL2	0	
4	HP1H	0	
5	HP1L	0	
6	HWD1	134	
7	CP1P	128	
8	CP1W	32	
9	HIN1	0	
10	WOF1	0	
11	O1WD	0	
12	WP1H	0	
13	WP1L	67	
14	WS1H	2	
15	WS1L	36	
16	RP1H	1	
17	RP1L	63	
18	RS1H	4	
19	RS1L	185	
20	MOD1	1	
21	GEN1	1	
22	GAI1	22	
23	YSD1	6	
24	YSW1	2	
25	YMD1	6	
26	YMW1	2	
27	GEN2	0	
28	GAI2	31	
29	YSD2	6	
30	YSW2	2	
31	YMD2	6	
32	YMW2	2	
33	MP1H	1	
34	MP1L	64	
35	MS1H	2	
36	MS1L	171	
37	FP1H	2	
38	FP1L	195	
39	FS1H	3	
40	FS1L	150	

DCP-BLK

Functionality		Data	Rremarks
No.	Name		
0	PSCL	*1	
1	LHBH	*1	
2	RHBH	*1	
3	LHBL	*1	
4	RHBL	*1	
5	UVBH	0	
6	LVBH	3	
7	UVBL	22	
8	LVBL	22	
9	LHPH	*1	
10	RHPH	*1	
11	LHPL	*1	
12	RHPL	*1	
13	UVPH	0	
14	LVPH	2	
15	UVPL	75	
16	LVPL	126	
17	LHKH	*1	
18	RHKL	*1	
19	LHKL	*1	
20	RHKH	*1	
21	UVKH	0	
22	LVKH	3	
23	UVKL	8	
24	LVKL	36	

Standards *1

No.	Name	Normal	Wide
0	PSCL	186	134
1	LHBH	1	0
2	RHBH	5	6
3	LHBL	166	232
4	RHBL	128	62
9	LHPH	1	1
10	RHPH	5	5
11	LHPL	230	80
12	RHPL	80	224
17	LHKH	0	0
18	RHKL	6	6
19	LHKL	217	217
20	RHKH	95	95

DCP-ADJ1

Functionality		Data	Remarks
No.	Name		
0	CBOF	*1	
1	CROF	*1	
2	SCON	*1	
3	RDRV	*2	
4	GDRV	*2	
5	BDRV	*2	
6	RCUT	*2	
7	GCUT	*2	
8	BCUT	*2	
9	SBRT	132	
10	SPIC	63	
11	SCOL	*1	
12	SCNF	128	
13	SCLF	128	

Standards *1

No.	Name	UV	Video	Component (480i)	Component (480p)	Component (1080i)	Component (720p)
0	CBOF	130	128	130	134	129	129
1	CROF	130	128	130	133	130	130
2	SCON	175	175	175	185	185	185
11	SCOL	185	185	170	185	185	185

No.	Name	ATSC (480i)	ATSC (480p)	ATSC (1080i)	ATSC (720p)	DTT/ATSC (Data)	DTT/ATSC (Lower)
0	CBOF	128	128	128	128	128	128
1	CROF	128	128	128	128	128	128
2	SCON	175	185	185	185	185	170
11	SCOL	170	185	185	185	176	176

No.	Name	DVI (480i)	DVI (480p)	DVI (1080i)	DVI (720p)	DVI (VGA etc)
0	CBOF	129	128	124	124	124
1	CROF	129	128	125	124	122
2	SCON	175	185	185	185	185
11	SCOL	170	185	185	185	185

No.	Name	iLINK (480i Except DV)	iLINK (480p)	iLINK (1080i)	iLINK (720p)	BS/CS-d/ iLINK (Data)	BS/CS-d/ iLINK (Lower)
0	CBOF	128	128	128	128	128	128
1	CROF	128	128	128	128	128	128
2	SCON	175	185	185	185	185	185
11	SCOL	170	185	185	185	176	176

No.	Name	iLINK(DV)	Memory Stick (Still)	Memory Stick (Movie:Console)	MS/CNM MOVIE(HQ)	Memory Stick (Movie:Lower)	Twin/Freeze/ INDEX/FAVORITE
0	CBOF	126	128	128	128	128	128
1	CROF	126	128	128	128	128	128
2	SCON	175	185	185	100	185	175
11	SCOL	170	185	185	176	185	170

Standards *2

No.	Name	Color Temperature			
		4(Used)	3(Reserved)	2(Reserved)	1(Reserved)
3	RDRV	140	140	140	140
4	GDRV	140	140	140	140
5	BDRV	140	140	140	140
6	RCUT	255	255	255	255
7	GCUT	255	255	255	255
8	BCUT	255	255	255	255

DCP-ADJ2

Functionality No.	Name	Data	Remarks
0	SHOF	*1	
1	SHF0	*1	
2	SHPC	*1	
3	PROV	*1	
4	HFBT	*1	
5	ULTI	*1	
6	LTSL	*2	
7	LTLV	*2	
8	LTDL	*2	
9	LTMD	*2	
10	LTCR	*2	
11	UCTI	*1	
12	CTLV	*3	
13	CTDL	*3	
14	CTMD	*3	
15	CTCR	*3	
16	MIDE	*1	
17	APCD	*1	
18	NRLV	*1	

Standards *1

No.	Name	Normal									
		UV					Video				
		VIVID	STANDARD MILD OFF	STANDARD MILD ON	PRO MILD OFF	PRO MILD ON	VIVID	STANDARD MILD OFF	STANDARD MILD ON	PRO MILD OFF	PRO MILD ON
0	SHOF	31	31	31	31	20	23	23	23	23	23
1	SHF0	13	13	13	13	13	14	1 4	14	14	14
2	SHPC	6	6	6	6	6	4	4	4	4	4
3	PROV	8	8	8	8	8	8	8	8	8	8
4	HFBT	0	0	0	0	0	0	0	0	0	0
5	ULTI	0	0	0	0	0	0	0	0	0	0
11	UCTI	0	0	0	0	0	0	0	0	0	0
16	MIDE	7	6	6	4	4	11	10	10	8	8
17	APCD	0	0	0	2	2	0	0	0	2	2
18	NRLV	0	0	0	0	0	6	5	7	0	0

No.	Name	Normal									
		ATSC (480i)					ATSC (480p)				
		VIVID	STANDARD MILD OFF	STANDARD MILD ON	PRO MILD OFF	PRO MILD ON	VIVID	STANDARD MILD OFF	STANDARD MILD ON	PRO MILD OFF	PRO MILD ON
0	SHOF	31	31	20	20	10	31	31	20	20	10
1	SHF0	14	14	14	14	14	13	1 3	13	13	13
2	SHPC	0	0	0	0	0	0	0	0	0	0
3	PROV	8	8	8	8	8	8	8	8	8	8
4	HFBT	0	0	0	0	0	0	0	0	0	0
5	ULTI	0	0	0	0	0	0	0	0	0	0
11	UCTI	6	6	0	0	0	6	6	0	0	0
16	MIDE	19	18	18	16	16	23	22	22	20	20
17	APCD	0	0	0	2	2	0	0	0	2	2
18	NRLV	6	5	7	0	0	6	5	7	0	0

No.	Name	Normal									
		ATSC (1080i)					ATSC (720p)				
		VIVID	STANDARD MILD OFF	STANDARD MILD ON	PRO MILD OFF	PRO MILD ON	VIVID	STANDARD MILD OFF	STANDARD MILD ON	PRO MILD OFF	PRO MILD ON
0	SHOF	31	31	20	31	20	31	31	20	31	20
1	SHF0	15	15	15	15	15	15	1 5	15	15	15
2	SHPC	0	0	0	0	0	0	0	0	0	0
3	PROV	8	8	8	8	8	8	8	8	8	8
4	HFBT	0	0	0	0	0	0	0	0	0	0
5	ULTI	0	0	0	0	0	0	0	0	0	0
11	UCTI	0	0	0	0	0	0	0	0	0	0
16	MIDE	27	26	26	24	24	31	30	30	28	28
17	APCD	2	2	2	2	2	2	2	2	2	2
18	NRLV	5	5	6	0	0	5	5	6	0	0

No.	Name	Normal				
		DTT/ATSC (LOWER)				
		VIVID	STANDARD MILD OFF	STANDARD MILD ON	PRO MILD OFF	PRO MILD ON
0	SHOF	31	31	31	31	31
1	SHF0	15	15	15	15	15
2	SHPC	0	0	0	0	0
3	PROV	8	8	8	8	8
4	HFBT	15	15	15	15	15
5	ULTI	0	0	0	0	0
11	UCTI	6	6	6	6	6
16	MIDE	31	31	31	31	31
17	APCD	2	2	2	2	2
18	NRLV	6	6	6	6	6

No.	Name	Normal									
		i.LINK (480i : Except DV)					i.LINK (480p)				
		VIVID	STANDARD MILD OFF	STANDARD MILD ON	PRO MILD OFF	PRO MILD ON	VIVID	STANDARD MILD OFF	STANDARD MILD ON	PRO MILD OFF	PRO MILD ON
0	SHOF	31	31	20	20	10	31	31	20	20	10
1	SHF0	14	14	14	14	14	13	13	13	13	13
2	SHPC	0	0	0	0	0	0	0	0	0	0
3	PROV	8	8	8	8	8	8	8	8	8	8
4	HFBT	0	0	0	0	0	0	0	0	0	0
5	ULTI	0	0	0	0	0	0	0	0	0	0
11	UCTI	6	6	0	0	0	6	6	0	0	0
16	MIDE	35	34	34	32	32	39	38	38	36	36
17	APCD	0	0	0	2	2	0	0	0	2	2
18	NRLV	6	5	7	0	0	6	5	7	0	0

No.	Name	Normal									
		i.LINK (1080i)					i.LINK (720p)				
		VIVID	STANDARD MILD OFF	STANDARD MILD ON	PRO MILD OFF	PRO MILD ON	VIVID	STANDARD MILD OFF	STANDARD MILD ON	PRO MILD OFF	PRO MILD ON
0	SHOF	31	31	20	31	20	31	31	20	31	20
1	SHF0	15	15	15	15	15	15	15	15	15	15
2	SHPC	0	0	0	0	0	0	0	0	0	0
3	PROV	8	8	8	8	8	8	8	8	8	8
4	HFBT	0	0	0	0	0	0	0	0	0	0
5	ULTI	0	0	0	0	0	0	0	0	0	0
11	UCTI	0	0	0	0	0	0	0	0	0	0
16	MIDE	43	42	42	40	40	47	46	46	44	44
17	APCD	2	2	2	2	2	2	2	2	2	2
18	NRLV	5	5	6	0	0	5	5	6	0	0

No.	Name	Normal									
		BS/CS-d/i.LINK (LOWER)					i.LINK(DV)				
		VIVID	STANDARD MILD OFF	STANDARD MILD ON	PRO MILD OFF	PRO MILD ON	VIVID	STANDARD MILD OFF	STANDARD MILD ON	PRO MILD OFF	PRO MILD ON
0	SHOF	31	31	31	31	31	31	31	20	20	10
1	SHF0	15	15	15	15	15	14	14	14	14	14
2	SHPC	0	0	0	0	0	0	0	0	0	0
3	PROV	8	8	8	8	8	8	8	8	8	8
4	HFBT	15	15	15	15	15	0	0	0	0	0
5	ULTI	0	0	0	0	0	0	0	0	0	0
11	UCTI	6	6	6	6	6	0	0	0	0	0
16	MIDE	31	31	31	31	31	15	14	14	12	12
17	APCD	2	2	2	2	2	0	0	0	2	2
18	NRLV	6	6	6	6	6	5	5	5	5	5

No.	Name	Normal									
		IND. DATA (480i)					IND.DATA (ex 480i)				
		VIVID	STANDARD MILD OFF	STANDARD MILD ON	PRO MILD OFF	PRO MILD ON	VIVID	STANDARD MILD OFF	STANDARD MILD ON	PRO MILD OFF	PRO MILD ON
0	SHOF	31	31	31	31	31	20	31	20	31	31
1	SHF0	15	15	15	15	15	15	15	15	15	15
2	SHPC	0	0	0	0	0	0	0	0	0	0
3	PROV	8	8	8	8	8	8	8	8	8	8
4	HFBT	15	15	15	15	15	15	15	15	15	15
5	ULTI	0	0	0	0	0	0	0	0	0	0
11	UCTI	6	6	6	6	6	0	0	0	6	6
16	MIDE	31	31	31	31	31	14	12	12	31	31
17	APCD	2	2	2	2	2	2	2	2	2	2
18	NRLV	6	6	6	6	6	5	5	5	6	6

No.	Name	Normal									
		ADD DATA (480i)					ADD DATA (ex 480i)				
		VIVID	STANDARD MILD OFF	STANDARD MILD ON	PRO MILD OFF	PRO MILD ON	VIVID	STANDARD MILD OFF	STANDARD MILD ON	PRO MILD OFF	PRO MILD ON
0	SHOF	31	31	31	20	31	20	31	31	31	31
1	SHF0	15	15	15	15	15	15	15	15	15	15
2	SHPC	0	0	0	0	0	0	0	0	0	0
3	PROV	8	8	8	8	8	8	8	8	8	8
4	HFBT	15	15	15	15	15	15	15	15	15	15
5	ULTI	0	0	0	0	0	0	0	0	0	0
11	UCTI	6	6	6	0	0	0	6	6	6	6
16	MIDE	31	31	31	14	12	12	31	31	31	31
17	APCD	2	2	2	2	2	2	2	2	2	2
18	NRLV	6	6	6	5	5	5	6	6	6	6

No.	Name	Normal									
		Component (480i)					Component (480p)				
		VIVID	STANDARD MILD OFF	STANDARD MILD ON	PRO MILD OFF	PRO MILD ON	VIVID	STANDARD MILD OFF	STANDARD MILD ON	PRO MILD OFF	PRO MILD ON
0	SHOF	31	31	20	20	10	31	31	20	20	10
1	SHF0	14	14	14	14	14	13	13	13	13	13
2	SHPC	0	0	0	0	0	0	0	0	0	0
3	PROV	8	8	8	8	8	8	8	8	8	8
4	HFBT	0	0	0	0	0	0	0	0	0	0
5	ULTI	0	0	0	0	0	0	0	0	0	0
11	UCTI	6	6	0	0	0	6	6	0	0	0
16	MIDE	51	50	50	48	48	55	54	54	52	52
17	APCD	2	2	2	2	2	2	2	2	2	2
18	NRLV	6	5	7	0	0	6	5	7	0	0

No.	Name	Normal									
		Component (1080i)					Component (720p)				
		VIVID	STANDARD MILD OFF	STANDARD MILD ON	PRO MILD OFF	PRO MILD ON	VIVID	STANDARD MILD OFF	STANDARD MILD ON	PRO MILD OFF	PRO MILD ON
0	SHOF	31	31	20	31	20	31	31	20	31	20
1	SHF0	15	15	15	15	15	15	15	15	15	15
2	SHPC	0	0	0	0	0	0	0	0	0	0
3	PROV	8	8	8	8	8	8	8	8	8	8
4	HFBT	0	0	0	0	0	0	0	0	0	0
5	ULTI	0	0	0	0	0	0	0	0	0	0
11	UCTI	0	0	0	0	0	0	0	0	0	0
16	MIDE	59	58	58	56	56	63	62	62	60	60
17	APCD	2	2	2	2	2	2	2	2	2	2
18	NRLV	5	5	6	0	0	5	5	6	0	0

No.	Name	Normal									
		DVI (480i)					DVI (480p)				
		VIVID	STANDARD MILD OFF	STANDARD MILD ON	PRO MILD OFF	PRO MILD ON	VIVID	STANDARD MILD OFF	STANDARD MILD ON	PRO MILD OFF	PRO MILD ON
0	SHOF	31	31	20	20	10	31	31	20	20	10
1	SHF0	14	14	14	14	14	13	13	13	13	13
2	SHPC	0	0	0	0	0	0	0	0	0	0
3	PROV	8	8	8	8	8	8	8	8	8	8
4	HFBT	0	0	0	0	0	0	0	0	0	0
5	ULTI	0	0	0	0	0	0	0	0	0	0
11	UCTI	6	6	0	0	0	6	6	0	0	0
16	MIDE	67	66	66	64	64	71	70	70	68	68
17	APCD	0	0	0	2	2	0	0	0	2	2
18	NRLV	6	5	7	0	0	6	5	7	0	0

No.	Name	Normal									
		DVI (1080i)					DVI (720p)				
		VIVID	STANDARD MILD OFF	STANDARD MILD ON	PRO MILD OFF	PRO MILD ON	VIVID	STANDARD MILD OFF	STANDARD MILD ON	PRO MILD OFF	PRO MILD ON
0	SHOF	31	31	20	31	20	31	31	20	31	20
1	SHF0	15	15	15	15	15	15	15	15	15	15
2	SHPC	0	0	0	0	0	0	0	0	0	0
3	PROV	8	8	8	8	8	8	8	8	8	8
4	HFBT	0	0	0	0	0	0	0	0	0	0
5	ULTI	0	0	0	0	0	0	0	0	0	0
11	UCTI	0	0	0	0	0	0	0	0	0	0
16	MIDE	75	74	74	72	72	79	78	78	76	76
17	APCD	2	2	2	2	2	2	2	2	2	2
18	NRLV	5	5	6	0	0	5	5	6	0	0

No.	Name	Normal				
		DVI (VGA etc)				
		VIVID	STANDARD MILD OFF	STANDARD MILD ON	PRO MILD OFF	PRO MILD ON
0	SHOF	31	31	20	20	10
1	SHF0	13	13	13	13	13
2	SHPC	0	0	0	0	0
3	PROV	8	8	8	8	8
4	HFBT	0	0	0	0	0
5	ULTI	0	0	0	0	0
11	UCTI	6	6	0	0	0
16	MIDE	83	82	82	80	80
17	APCD	0	0	0	2	2
18	NRLV	6	5	7	0	0

No.	Name	Normal									
		MS (STILL)					MS MOVIE(CONT-PANEL))				
		VIVID	STANDARD MILD OFF	STANDARD MILD ON	PRO MILD OFF	PRO MILD ON	VIVID	STANDARD MILD OFF	STANDARD MILD ON	PRO MILD OFF	PRO MILD ON
0	SHOF	31	31	10	31	10	31	31	10	31	10
1	SHF0	15	15	15	15	15	15	1 5	15	15	15
2	SHPC	0	0	0	0	0	0	0	0	0	0
3	PROV	8	8	8	8	8	8	8	8	8	8
4	HFBT	0	0	0	0	0	0	0	0	0	0
5	ULTI	0	0	0	0	0	0	0	0	0	0
11	UCTI	0	0	0	0	0	0	0	0	0	0
16	MIDE	87	86	86	84	84	91	90	90	88	88
17	APCD	2	2	2	2	2	2	2	2	2	2
18	NRLV	5	5	6	0	0	5	5	6	0	0

No.	Name	Normal									
		MS (MOVIE(HQ))					MS MOVIE(LQ))				
		VIVID	STANDARD MILD OFF	STANDARD MILD ON	PRO MILD OFF	PRO MILD ON	VIVID	STANDARD MILD OFF	STANDARD MILD ON	PRO MILD OFF	PRO MILD ON
0	SHOF	31	31	10	31	31	31	31	10	31	10
1	SHF0	15	15	15	15	15	15	1 5	15	15	15
2	SHPC	0	0	0	0	0	0	0	0	0	0
3	PROV	8	8	8	8	8	8	8	8	8	8
4	HFBT	0	0	0	0	0	0	0	0	0	0
5	ULTI	0	0	0	0	0	0	0	0	0	0
11	UCTI	0	0	0	0	0	0	0	0	0	0
16	MIDE	95	84	84	91	90	99	98	98	96	96
17	APCD	2	2	2	2	2	2	2	2	2	2
18	NRLV	5	5	6	5	5	5	5	6	0	0

No.	Name	Full/Widezoom/Zoom											
		UV						Video					
		VIVID		STANDARD	STANDARD	PRO	PRO	IVID		STANDARD	STANDARD	PRO	PRO
		60"	70"	MILD OFF	MILD ON	MILD OFF	MILD ON	60"	70"	MILD OFF	MILD ON	MILD OFF	MILD ON
0	SHOF	50	50	45	38	38	31	39	39	28	28	28	28
1	SHF0	13	13	13	13	13	13	14	14	14	14	14	14
2	SHPC	6	6	6	6	6	6	4	4	4	4	4	4
3	PROV	8	8	8	8	8	8	8	8	8	8	8	8
4	HFBT	0	0	0	0	0	0	0	0	0	0	0	0
5	ULTI	2	2	0	0	0	0	1	1	0	0	0	0
11	UCTI	6	6	6	6	6	6	6	6	6	6	6	6
16	MIDE	7	7	6	6	4	4	11	11	10	10	8	8
17	APCD	2	1	2	2	2	2	2	1	2	2	2	2
18	NRLV	6	6	0	0	0	0	6	6	5	7	0	0

No.	Name	Full/Widezoom/Zoom											
		ATSC (480i)						ATSC (480p)					
		VIVID		STANDARD	STANDARD	PRO	PRO	VIVID		STANDARD	STANDARD	PRO	PRO
		60"	70"	MILD OFF	MILD ON	MILD OFF	MILD ON	60"	70"	MILD OFF	MILD ON	MILD OFF	MILD ON
0	SHOF	31	31	31	20	20	10	41	41	41	20	31	10
1	SHF0	14	14	14	14	14	14	13	13	13	13	13	13
2	SHPC	0	0	0	0	0	0	0	0	0	0	0	0
3	PROV	8	8	8	8	8	8	8	8	8	8	8	8
4	HFBT	15	15	15	0	0	0	15	15	15	0	0	0
5	ULTI	1	1	0	0	0	0	1	1	0	0	0	0
11	UCTI	6	6	6	0	0	0	6	6	6	0	0	0
16	MIDE	19	19	18	18	16	16	23	23	22	22	20	20
17	APCD	2	1	2	2	2	2	2	1	2	2	2	2
18	NRLV	6	6	5	7	0	0	6	6	5	7	0	0

No.	Name	Full/Widezoom/Zoom											
		ATSC (1080i)						ATSC (720p)					
		VIVID		STANDARD	STANDARD	PRO	PRO	IVID		STANDARD	STANDARD	PRO	PRO
		60"	70"	MILD OFF	MILD ON	MILD OFF	MILD ON	60"	70"	MILD OFF	MILD ON	MILD OFF	MILD ON
0	SHOF	31	31	31	20	31	20	31	31	31	20	31	20
1	SHF0	15	15	15	15	15	15	15	15	15	15	15	15
2	SHPC	0	0	0	0	0	0	0	0	0	0	0	0
3	PROV	8	8	8	8	8	8	8	8	8	8	8	8
4	HFBT	15	15	15	0	0	0	15	15	15	15	15	15
5	ULTI	0	0	0	0	0	0	0	0	0	0	0	0
11	UCTI	0	0	0	0	0	0	0	0	0	0	0	0
16	MIDE	27	27	26	26	24	24	31	31	30	30	28	28
17	APCD	2	1	2	2	2	2	2	1	2	2	2	2
18	NRLV	5	5	5	6	0	0	5	5	5	6	0	0

No.	Name	ex NORMAL				
		DTT/ATSC (LOWER)				
		VIVID	STANDARD MILD OFF	STANDARD MILD ON	PRO MILD OFF	PRO MILD ON
0	SHOF	31	31	20	31	31
1	SHF0	15	15	15	15	15
2	SHPC	0	0	0	0	0
3	PROV	8	8	8	8	8
4	HFBT	15	0	0	15	15
5	ULTI	0	0	0	0	0
11	UCTI	6	0	0	0	0
16	MIDE	31	24	24	31	30
17	APCD	2	2	2	2	2
18	NRLV	6	6	6	5	5

No.	Name	Full/Widezoom/Zoom											
		i.LINK (480i : Except DV)						i.LINK (480p)					
		VIVID		STANDARD MILD OFF	STANDARD MILD ON	PRO MILD OFF	PRO MILD ON	VIVID		STANDARD MILD OFF	STANDARD MILD ON	PRO MILD OFF	PRO MILD ON
		60"	70"					60"	70"				
0	SHOF	31	31	31	20	20	10	41	41	41	20	31	10
1	SHF0	14	14	14	14	14	14	13	13	13	13	13	13
2	SHPC	0	0	0	0	0	0	0	0	0	0	0	0
3	PROV	8	8	8	8	8	8	8	8	8	8	8	8
4	HFBT	15	15	15	0	0	0	15	15	15	0	0	0
5	ULTI	1	1	0	0	0	0	1	1	0	0	0	0
11	UCTI	6	6	6	0	0	0	6	6	6	0	0	0
16	MIDE	35	35	34	34	32	32	39	39	38	38	36	36
17	APCD	2	1	2	2	2	2	2	1	2	2	2	2
18	NRLV	6	6	5	7	0	0	6	6	5	7	0	0

No.	Name	Full/Widezoom/Zoom											
		i.LINK (1080i)						i.LINK (720p)					
		VIVID		STANDARD MILD OFF	STANDARD MILD ON	PRO MILD OFF	PRO MILD ON	VIVID		STANDARD MILD OFF	STANDARD MILD ON	PRO MILD OFF	PRO MILD ON
		60"	70"					60"	70"				
0	SHOF	31	31	31	20	31	20	31	31	31	20	31	20
1	SHF0	15	15	15	15	15	15	15	15	15	15	15	15
2	SHPC	0	0	0	0	0	0	0	0	0	0	0	0
3	PROV	8	8	8	8	8	8	8	8	8	8	8	8
4	HFBT	15	15	15	0	0	0	15	15	15	15	15	15
5	ULTI	0	0	0	0	0	0	0	0	0	0	0	0
11	UCTI	0	0	0	0	0	0	0	0	0	0	0	0
16	MIDE	43	43	42	42	40	40	47	47	46	46	44	44
17	APCD	2	1	2	2	2	2	2	1	2	2	2	2
18	NRLV	5	5	5	6	0	0	5	5	5	6	0	0

No.	Name	Full/Widezoom/Zoom											
		BS/CS-d/i.LINK (LOWER)					i.LINK(DV)						
		VIVID	STANDARD MILD OFF	STANDARD MILD ON	PRO MILD OFF	PRO MILD ON	VIVID		STANDARD MILD OFF	STANDARD MILD ON	PRO MILD OFF	PRO MILD ON
							60"	70"				
0	SHOF	31	31	20	31	31	31	31	31	20	20	10
1	SHF0	15	15	15	15	15	14	14	14	14	14	14
2	SHPC	0	0	0	0	0	0	0	0	0	0	0
3	PROV	8	8	8	8	8	8	8	8	8	8	8
4	HFBT	15	0	0	15	15	15	15	15	15	15	15
5	ULTI	0	0	0	0	0	1	1	0	0	0	0
11	UCTI	6	0	0	0	0	6	6	6	0	0	0
16	MIDE	31	40	40	47	46	15	15	14	14	12	12
17	APCD	2	2	2	2	2	2	1	2	2	2	2
18	NRLV	6	6	6	5	5	5	5	5	5	5	5

No.	Name	ex NORMAL									
		IND. DATA (480i)					IND.DATA (ex 480i)				
		VIVID	STANDARD MILD OFF	STANDARD MILD ON	PRO MILD OFF	PRO MILD ON	VIVID	STANDARD MILD OFF	STANDARD MILD ON	PRO MILD OFF	PRO MILD ON
0	SHOF	31	31	31	31	31	20	31	20	20	31
1	SHF0	15	15	15	15	15	15	1 5	15	15	15
2	SHPC	0	0	0	0	0	0	0	0	0	0
3	PROV	8	8	8	8	8	8	8	8	8	8
4	HFBT	15	15	15	15	15	15	15	15	15	15
5	ULTI	0	0	0	0	0	0	0	0	0	0
11	UCTI	6	0	0	0	0	0	0	0	0	0
16	MIDE	31	47	46	15	14	14	12	12	12	47
17	APCD	2	2	2	2	2	2	2	2	2	2
18	NRLV	6	6	6	6	6	6	6	6	6	6

No.	Name	ex NORMAL									
		ADD DATA (480i)					ADD DATA (ex 480i)				
		VIVID	STANDARD MILD OFF	STANDARD MILD ON	PRO MILD OFF	PRO MILD ON	VIVID	STANDARD MILD OFF	STANDARD MILD ON	PRO MILD OFF	PRO MILD ON
0	SHOF	31	31	31	20	31	20	31	31	31	31
1	SHF0	15	15	15	15	15	15	1 5	15	15	15
2	SHPC	0	0	0	0	0	0	0	0	0	0
3	PROV	8	8	8	8	8	8	8	8	8	8
4	HFBT	15	15	15	15	15	15	15	15	15	15
5	ULTI	0	0	0	0	0	0	0	0	0	0
11	UCTI	6	0	0	0	0	0	0	0	0	0
16	MIDE	31	15	14	14	12	12	47	47	47	15
17	APCD	2	2	2	2	2	2	2	2	2	2
18	NRLV	6	5	5	5	5	5	6	6	6	5

No.	Name	Full/Widezoom/Zoom											
		Component (480i)						Component (480p)					
		VIVID		STANDARD MILD OFF	STANDARD MILD ON	PRO MILD OFF	PRO MILD ON	VIVID		STANDARD MILD OFF	STANDARD MILD ON	PRO MILD OFF	PRO MILD ON
		60"	70"					60"	70"				
0	SHOF	31	31	31	20	20	10	41	41	41	20	31	10
1	SHF0	14	14	14	14	14	14	13	13	13	13	13	13
2	SHPC	0	0	0	0	0	0	0	0	0	0	0	0
3	PROV	8	8	8	8	8	8	8	8	8	8	8	8
4	HFBT	15	15	15	0	0	0	15	15	15	0	0	0
5	ULTI	1	1	0	0	0	0	1	1	0	0	0	0
11	UCTI	6	6	6	0	0	0	6	6	6	0	0	0
16	MIDE	51	51	50	50	48	48	55	55	54	54	52	52
17	APCD	2	1	2	2	2	2	2	1	2	2	2	2
18	NRLV	6	6	5	7	0	0	6	6	5	7	0	0

No.	Name	Full/Widezoom/Zoom											
		Component (1080i)						Component (720p)					
		VIVID		STANDARD MILD OFF	STANDARD MILD ON	PRO MILD OFF	PRO MILD ON	VIVID		STANDARD MILD OFF	STANDARD MILD ON	PRO MILD OFF	PRO MILD ON
		60"	70"					60"	70"				
0	SHOF	31	31	31	20	31	20	31	31	31	20	31	20
1	SHF0	15	15	15	15	15	15	15	15	15	15	15	15
2	SHPC	0	0	0	0	0	0	0	0	0	0	0	0
3	PROV	8	8	8	8	8	8	8	8	8	8	8	8
4	HFBT	15	15	15	0	0	0	15	15	15	15	15	15
5	ULTI	0	0	0	0	0	0	0	0	0	0	0	0
11	UCTI	0	0	0	0	0	0	0	0	0	0	0	0
16	MIDE	59	59	58	58	56	56	63	63	62	62	60	60
17	APCD	2	1	2	2	2	2	2	1	2	2	2	2
18	NRLV	5	5	5	6	0	0	5	5	5	6	0	0

No.	Name	Full/Widezoom/Zoom											
		DVI (480i)						DVI (480p)					
		VIVID		STANDARD MILD OFF	STANDARD MILD ON	PRO MILD OFF	PRO MILD ON	VIVID		STANDARD MILD OFF	STANDARD MILD ON	PRO MILD OFF	PRO MILD ON
		60"	70"					60"	70"				
0	SHOF	31	31	31	20	20	10	41	41	41	20	31	10
1	SHF0	14	14	14	14	14	14	13	13	13	13	13	13
2	SHPC	0	0	0	0	0	0	0	0	0	0	0	0
3	PROV	8	8	8	8	8	8	8	8	8	8	8	8
4	HFBT	15	15	15	0	0	0	15	15	15	0	0	0
5	ULTI	1	1	0	0	0	0	1	1	0	0	0	0
11	UCTI	6	6	6	0	0	0	6	6	6	0	0	0
16	MIDE	67	67	66	66	64	64	71	71	70	70	68	68
17	APCD	2	1	2	2	2	2	2	1	2	2	2	2
18	NRLV	6	6	5	7	0	0	6	6	5	7	0	0

No.	Name	Full/Widezoom/Zoom											
		DVI (1080i)						DVI (720p)					
		VIVID		STANDARD MILD OFF	STANDARD MILD ON	PRO MILD OFF	PRO MILD ON	VIVID		STANDARD MILD OFF	STANDARD MILD ON	PRO MILD OFF	PRO MILD ON
		60"	70"					60"	70"				
0	SHOF	31	31	31	20	31	20	31	31	31	20	31	20
1	SHF0	15	15	15	15	15	15	15	15	15	15	15	15
2	SHPC	0	0	0	0	0	0	0	0	0	0	0	0
3	PROV	8	8	8	8	8	8	8	8	8	8	8	8
4	HFBT	15	15	15	0	0	0	15	15	15	15	15	15
5	ULTI	0	0	0	0	0	0	0	0	0	0	0	0
11	UCTI	0	0	0	0	0	0	0	0	0	0	0	0
16	MIDE	75	75	74	74	72	72	79	79	78	78	76	76
17	APCD	2	1	2	2	2	2	2	1	2	2	2	2
18	NRLV	5	5	5	6	0	0	5	5	5	6	0	0

No.	Name	Full/Widezoom/Zoom					
		DVI (VGA etc)					
		VIVID		STANDARD	STANDARD	PRO	PRO
		60"	70"	MILD OFF	MILD ON	MILD OFF	MILD ON
0	SHOF	41	41	41	20	31	10
1	SHF0	13	13	13	13	13	13
2	SHPC	0	0	0	0	0	0
3	PROV	8	8	8	8	8	8
4	HFBT	15	15	15	0	0	0
5	ULTI	1	1	0	0	0	0
11	UCTI	6	6	6	0	0	0
16	MIDE	83	83	82	82	80	80
17	APCD	2	1	2	2	2	2
18	NRLV	6	6	5	7	0	0

No.	Name	Full/Widezoom/Zoom											
		MS (STILL)						MS (MOVIE(CONT-PANEL))					
		VIVID		STANDARD	STANDARD	PRO	PRO	VIVID		STANDARD	STANDARD	PRO	PRO
		60"	70"	MILD OFF	MILD ON	MILD OFF	MILD ON	60"	70"	MILD OFF	MILD ON	MILD OFF	MILD ON
0	SHOF	20	20	20	0	20	0	20	20	20	0	20	0
1	SHF0	15	15	15	15	15	15	15	15	15	15	15	15
2	SHPC	0	0	0	0	0	0	0	0	0	0	0	0
3	PROV	8	8	8	8	8	8	8	8	8	8	8	8
4	HFBT	0	0	0	0	0	0	0	0	0	0	0	0
5	ULTI	0	0	0	0	0	0	0	0	0	0	0	0
11	UCTI	0	0	0	0	0	0	0	0	0	0	0	0
16	MIDE	84	84	84	84	84	84	88	88	88	88	88	88
17	APCD	2	1	2	2	2	2	2	1	2	2	2	2
18	NRLV	5	5	5	6	0	0	5	5	5	6	0	0

No.	Name	Full/Widezoom/Zoom											
		MS (MOVIE(HQ))					MS (MOVIE(LQ))						
		VIVID		STANDARD	STANDARD	PRO	PRO	VIVID		STANDARD	STANDARD	PRO	PRO
				MILD OFF	MILD ON	MILD OFF	MILD ON	60"	70"	MILD OFF	MILD ON	MILD OFF	MILD ON
0	SHOF	31		31	10	31	31	20	20	20	0	20	0
1	SHF0	15		15	15	15	15	15	15	15	15	15	15
2	SHPC	0		0	0	0	0	0	0	0	0	0	0
3	PROV	8		8	8	8	8	8	8	8	8	8	8
4	HFBT	0		0	0	0	0	0	0	0	0	0	0
5	ULTI	0		0	0	0	0	0	0	0	0	0	0
11	UCTI	0		0	0	0	0	0	0	0	0	0	0
16	MIDE	95		84	84	91	90	96	96	96	96	96	96
17	APCD	2		2	2	2	2	2	1	2	2	2	2
18	NRLV	5		5	6	5	5	5	5	5	6	0	0

No.	Name	Multi Window											
		Twin/Freeze						Index					
		VIVID		STANDARD	STANDARD	PRO	PRO	VIVID		STANDARD	STANDARD	PRO	PRO
		60"	70"	MILD OFF	MILD ON	MILD OFF	MILD ON	60"	70"	MILD OFF	MILD ON	MILD OFF	MILD ON
0	SHOF	31	31	31	20	31	20	31	31	31	20	31	20
1	SHF0	14	14	14	14	14	14	14	14	14	14	14	14
2	SHPC	0	0	0	0	0	0	0	0	0	0	0	0
3	PROV	8	8	8	8	8	8	8	8	8	8	8	8
4	HFBT	0	0	0	0	0	0	0	0	0	0	0	0
5	ULTI	0	0	0	0	0	0	0	0	0	0	0	0
11	UCTI	0	0	0	0	0	0	0	0	0	0	0	0
16	MIDE	0	0	0	0	0	0	0	0	0	0	0	0
17	APCD	2	1	2	2	2	2	2	1	2	2	2	2
18	NRLV	0	0	0	0	0	0	0	0	0	0	0	0

No.	Name	Multi Window					
		Favorites					
		VIVID		STANDARD	STANDARD	PRO	PRO
		60"	70"	MILD OFF	MILD ON	MILD OFF	MILD ON
0	SHOF	31	31	31	20	31	20
1	SHF0	14	14	14	14	14	14
2	SHPC	0	0	0	0	0	0
3	PROV	8	8	8	8	8	8
4	HFBT	0	0	0	0	0	0
5	ULTI	0	0	0	0	0	0
11	UCTI	0	0	0	0	0	0
16	MIDE	0	0	0	0	0	0
17	APCD	2	1	2	2	2	2
18	NRLV	0	0	0	0	0	0

Standards *2

No.	Name	ULTI=0	ULTI=1	ULTI=2	ULTI=3	ULTI=4	ULTI=5	ULTI=6	ULTI=7
6	LTSL	0	0	1	3	1	2	3	1
7	LTLV	0	1	3	3	1	1	1	2
8	LTDL	0	12	12	15	14	14	14	14
9	LTMD	0	0	0	1	1	1	1	0
10	LTCR	0	0	0	0	0	0	0	0

No.	Name	ULTI=8	ULTI=9	ULTI=10	ULTI=11	ULTI=12	ULTI=13	ULTI=14	ULTI=15
6	LTSL	2	2	2	2	2	1	1	2
7	LTLV	2	3	1	2	3	1	3	3
8	LTDL	14	14	14	14	14	14	14	14
9	LTMD	0	0	1	1	1	0	0	0
10	LTCR	0	0	0	0	0	0	0	0

No.	Name	UCTI=0	UCTI=1	UCTI=2	UCTI=3	UCTI=4	UCTI=5	UCTI=6	UCTI=7
12	CTLV	0	1	2	3	4	5	6	7
13	CTDL	0	6	6	6	6	6	6	6
14	CTMD	0	0	0	0	0	0	0	0
15	CTCR	0	0	0	0	0	0	0	0

No.	Name	UCTI=8	UCTI=9	UCTI=10	UCTI=11	UCTI=12	UCTI=13	UCTI=14	UCTI=15
12	CTLV	8	9	10	11	12	13	14	15
13	CTDL	6	6	6	6	6	6	6	6
14	CTMD	0	0	0	0	0	0	0	0
15	CTCR	0	0	0	0	0	0	0	0

DCP-USER

Functionality		Data	Remarks
No.	Name		
0	UPIC	*1	
1	UBRT	*1	
2	UCOL	*1	
3	UHUE	*1	
4	USHP	*1	
5	UTMP	*1	
6	UDCL	*1	
7	UNRT	*1	
8	UBNR	*1	
9	UDRC	*1	
10	UBLT	*1	
11	UPOF	*2	
12	UBOF	*2	
13	UCOF	*2	
14	UHOF	*2	
15	AXIS	*2	
16	RYB	*3	
17	RYR	*3	
18	GYB	*3	
19	GYR	*3	
20	UGAM	*2	
21	RGAM	*4	
22	GGAM	*4	
23	BGAM	*4	
24	UDCT	*2	
25	DCTR	*5	
26	DCT1	*5	
27	DCT2	*5	
28	UAPD	*2	
29	APDL	*6	
30	APDK	*6	
31	APDD	*6	
32	APDA	*6	
33	APDH	*6	
34	LSCL	*2	
35	UDCI	*2	
36	DCIE	*7	
37	DAUT	*7	
38	DGAI	*7	
39	DLPF	*7	
40	DINF	*7	
41	DPIC	255	
42	DBRT	202	
43	LPSW	*8	

Standards *1

No.	Name	60"				70"			
		Vivid	Standard	Pro	Reserved	Vivid	Standard	Pro	Reserved
0	UPIC	63	54	46	48	63	54	46	48
1	UBRT	25	39	31	31	25	39	31	31
2	UCOL	37	35	31	31	37	34	31	31
3	UHUE	31	31	31	31	31	31	31	31
4	USHP	42	40	36	31	42	40	36	31
5	UTMP	2	1	1	3	2	1	1	3
6	UDCL	0	0	0	0	0	0	0	0
7	UNRT	1	2	0	0	1	2	0	0
8	UBNR	0	0	0	0	0	0	0	0
9	UDRC	2	3	1	0	2	3	1	0
10	UBLT	0	0	0	0	0	0	0	0

Standards *2

No.	Name	UV				Video			
		Vivid	Standard	Pro	Reserved	Vivid	Standard	Pro	Reserved
11	UPOF	31	31	31	31	31	31	31	31
12	UBOF	55	37	29	47	55	37	29	47
13	UCOF	31	32	31	34	31	32	31	34
14	UHOF	31	31	31	31	31	31	31	31
15	AXIS	0	0	0	2	0	0	0	2
20	UGAM	6	3	0	5	6	3	0	5
24	UDCT	8	8	0	6	8	8	0	6
28	UAPD	8	4	0	6	8	4	0	6
34	LSCL	60	60	60	60	60	60	60	60
35	UDCI	4	2	0	3	4	2	0	3

No.	Name	ATSC (480i)				ATSC (480p)			
		Vivid	Standard	Pro	Reserved	Vivid	Standard	Pro	Reserved
11	UPOF	31	31	31	31	31	31	31	31
12	UBOF	55	37	29	41	55	37	29	41
13	UCOF	31	32	31	34	31	32	31	34
14	UHOF	31	31	31	31	31	31	31	31
15	AXIS	0	0	0	2	0	0	0	2
20	UGAM	6	3	0	5	6	3	0	5
24	UDCT	8	8	0	8	8	8	0	8
28	UAPD	8	4	0	6	8	4	0	6
34	LSCL	60	60	60	60	60	60	60	60
35	UDCI	4	2	0	3	4	2	0	3

No.	Name	ATSC (1080i)				ATSC (720p)			
		Vivid	Standard	Pro	Reserved	Vivid	Standard	Pro	Reserved
11	UPOF	31	31	31	31	31	31	31	31
12	UBOF	31	31	35	47	31	31	35	47
13	UCOF	31	31	31	31	31	31	31	31
14	UHOF	31	31	31	31	31	31	31	31
15	AXIS	2	2	2	2	2	2	2	2
20	UGAM	10	8	0	7	10	8	0	7
24	UDCT	8	8	0	8	8	8	0	8
28	UAPD	6	3	0	5	6	3	0	5
34	LSCL	60	60	60	60	60	60	60	60
35	UDCI	0	0	0	0	0	0	0	0

No.	Name	DTT/ATSC (LOWER)			
		Vivid	Standard	Pro	Reserved
11	UPOF	31	31	31	31
12	UBOF	31	31	31	31
13	UCOF	31	31	31	31
14	UHOF	31	31	31	31
15	AXIS	2	2	2	2
20	UGAM	8	7	0	7
24	UDCT	8	8	0	8
28	UAPD	10	5	0	5
34	LSCL	60	60	60	60
35	UDCI	0	0	0	0

No.	Name	i.LINK (480i : Except DV)				i.LINK (480p)			
		Vivid	Standard	Pro	Reserved	Vivid	Standard	Pro	Reserved
11	UPOF	31	31	31	31	31	31	31	31
12	UBOF	55	37	29	41	55	37	29	41
13	UCOF	31	32	31	34	31	32	31	34
14	UHOF	31	31	31	31	31	31	31	31
15	AXIS	0	0	0	2	0	0	0	2
20	UGAM	6	3	0	5	6	3	0	5
24	UDCT	8	8	0	8	8	8	0	8
28	UAPD	8	4	0	6	8	4	0	6
34	LSCL	60	60	60	60	60	60	60	60
35	UDCI	4	2	0	3	4	2	0	3

No.	Name	i.LINK (1080i)				i.LI NK (720p)			
		Vivid	Standard	Pro	Reserved	Vivid	Standard	Pro	Reserved
11	UPOF	31	31	31	31	31	31	31	31
12	UBOF	31	31	35	47	31	31	35	47
13	UCOF	31	31	31	31	31	31	31	31
14	UHOF	31	31	31	31	31	31	31	31
15	AXIS	2	2	2	2	2	2	2	2
20	UGAM	10	8	0	7	10	8	0	7
24	UDCT	8	8	0	8	8	8	0	8
28	UAPD	6	3	0	5	6	3	0	5
34	LSCL	60	60	60	60	60	60	60	60
35	UDCI	0	0	0	0	0	0	0	0

No.	Name	BS/CS-d/i.LINK (LOWER)				i.LINK (DV)			
		Vivid	Standard	Pro	Reserved	Vivid	Standard	Pro	Reserved
11	UPOF	31	31	31	31	31	31	31	31
12	UBOF	31	47	35	47	55	37	29	41
13	UCOF	31	31	31	31	31	32	31	34
14	UHOF	31	31	31	31	31	31	31	31
15	AXIS	2	2	2	2	0	0	0	2
20	UGAM	8	7	0	7	6	3	0	5
24	UDCT	8	8	0	8	8	8	0	8
28	UAPD	10	5	0	5	8	4	0	6
34	LSCL	60	60	60	60	60	60	60	60
35	UDCI	0	0	0	0	4	2	0	3

No.	Name	IND. DATA (480i)				IND.DATA (ex 480i)			
		Vivid	Standard	Pro	Reserved	Vivid	Standard	Pro	Reserved
11	UPOF	31	31	31	31	31	31	31	31
12	UBOF	31	31	31	31	31	31	31	31
13	UCOF	31	31	31	31	31	31	31	31
14	UHOF	31	31	31	31	31	31	31	31
15	AXIS	2	2	2	2	2	2	2	2
20	UGAM	8	7	0	7	8	7	0	7
24	UDCT	8	8	0	8	8	8	0	8
28	UAPD	10	5	0	5	10	5	0	5
34	LSCL	60	60	60	60	60	60	60	60
35	UDCI	0	0	0	0	0	0	0	0

No.	Name	ADD DATA (480i)				ADD DATA (ex 480i)			
		Vivid	Standard	Pro	Reserved	Vivid	Standard	Pro	Reserved
11	UPOF	31	31	31	31	31	31	31	31
12	UBOF	31	31	31	31	31	31	31	31
13	UCOF	31	31	31	31	31	31	31	31
14	UHOF	31	31	31	31	31	31	31	31
15	AXIS	2	2	2	2	2	2	2	2
20	UGAM	8	7	0	7	8	7	0	7
24	UDCT	8	8	0	8	8	8	0	8
28	UAPD	10	5	0	5	10	5	0	5
34	LSCL	60	60	60	60	60	60	60	60
35	UDCI	0	0	0	0	0	0	0	0

No.	Name	Component (480i)				Component (480p)			
		Vivid	Standard	Pro	Reserved	Vivid	Standard	Pro	Reserved
11	UPOF	31	31	31	31	31	31	31	31
12	UBOF	55	37	29	41	55	37	29	41
13	UCOF	31	32	31	34	31	32	31	34
14	UHOF	31	31	31	31	31	31	31	31
15	AXIS	0	0	0	2	0	0	0	2
20	UGAM	6	3	0	5	6	3	0	5
24	UDCT	8	8	0	8	8	8	0	8
28	UAPD	8	4	0	6	8	4	0	6
34	LSCL	60	60	60	60	60	60	60	60
35	UDCI	4	2	0	3	4	2	0	3

No.	Name	Component (1080i)				Component (720p)			
		Vivid	Standard	Pro	Reserved	Vivid	Standard	Pro	Reserved
11	UPOF	31	31	31	31	31	31	31	31
12	UBOF	31	31	35	47	31	31	35	47
13	UCOF	31	31	31	31	31	31	31	31
14	UHOF	31	31	31	31	31	31	31	31
15	AXIS	2	2	2	2	2	2	2	2
20	UGAM	10	8	0	7	10	8	0	7
24	UDCT	8	8	0	8	8	8	0	8
28	UAPD	6	3	0	5	6	3	0	5
34	LSCL	60	60	60	60	60	60	60	60
35	UDCI	0	0	0	0	0	0	0	0

No.	Name	DVI (480i)				DVI (480p)			
		Vivid	Standard	Pro	Reserved	Vivid	Standard	Pro	Reserved
11	UPOF	31	31	31	31	31	31	31	31
12	UBOF	55	37	29	41	55	37	29	41
13	UCOF	31	32	31	34	31	32	31	34
14	UHOF	31	31	31	31	31	31	31	31
15	AXIS	0	0	0	2	0	0	0	2
20	UGAM	6	3	0	5	6	3	0	5
24	UDCT	8	8	0	8	8	8	0	8
28	UAPD	8	4	0	6	8	4	0	6
34	LSCL	60	60	60	60	60	60	60	60
35	UDCI	4	2	0	3	4	2	0	3

No.	Name	DVI (1080i)				DVI (720p)			
		Vivid	Standard	Pro	Reserved	Vivid	Standard	Pro	Reserved
11	UPOF	31	31	31	31	31	31	31	31
12	UBOF	31	31	35	47	31	31	35	47
13	UCOF	31	31	31	31	31	31	31	31
14	UHOF	31	31	31	31	31	31	31	31
15	AXIS	2	2	2	2	2	2	2	2
20	UGAM	10	8	0	7	10	8	0	7
24	UDCT	8	8	0	8	8	8	0	8
28	UAPD	6	3	0	5	6	3	0	5
34	LSCL	60	60	60	60	60	60	60	60
35	UDCI	0	0	0	0	0	0	0	0

No.	Name	DVI (VGA etc)			
		Vivid	Standard	Pro	Reserved
11	UPOF	31	31	31	31
12	UBOF	55	37	29	41
13	UCOF	31	32	31	34
14	UHOF	31	31	31	31
15	AXIS	0	0	0	2
20	UGAM	6	3	0	5
24	UDCT	8	8	0	8
28	UAPD	8	4	0	6
34	LSCL	60	60	60	60
35	UDCI	4	2	0	3

No.	Name	MS (STILL)				MS (MOVIE(CONT-PANEL))			
		Vivid	Standard	Pro	Reserved	Vivid	Standard	Pro	Reserved
11	UPOF	31	31	31	31	31	31	31	31
12	UBOF	31	31	35	47	31	31	35	47
13	UCOF	35	33	31	31	35	33	31	31
14	UHOF	31	31	31	31	31	31	31	31
15	AXIS	2	2	2	2	2	2	2	2
20	UGAM	10	8	0	7	10	8	0	7
24	UDCT	8	8	0	8	8	8	0	8
28	UAPD	6	3	0	5	6	3	0	5
34	LSCL	60	60	60	60	60	60	60	60
35	UDCI	0	0	0	0	0	0	0	0

No.	Name	MS (MOVIE(HQ))				MS (MOVIE(LQ))			
		Vivid	Standard	Pro	Reserved	Vivid	Standard	Pro	Reserved
11	UPOF	31	31	31	31	31	31	31	31
12	UBOF	31	31	35	47	31	31	35	47
13	UCOF	31	31	31	31	35	33	31	31
14	UHOF	31	31	31	31	31	31	31	31
15	AXIS	2	2	2	2	2	2	2	2
20	UGAM	8	7	0	7	10	8	0	7
24	UDCT	8	8	0	8	8	8	0	8
28	UAPD	10	5	0	5	6	3	0	5
34	LSCL	60	60	60	60	60	60	60	60
35	UDCI	0	0	0	0	0	0	0	0

No.	Name	Multi Window							
		Twin/Freeze				Index			
		Vivid	Standard	Pro	Reserved	Vivid	Standard	Pro	Reserved
11	UPOF	31	31	31	31	31	31	31	31
12	UBOF	31	31	35	47	31	31	35	47
13	UCOF	31	31	31	31	31	31	31	31
14	UHOF	31	31	31	31	31	31	31	31
15	AXIS	2	2	2	2	2	2	2	2
20	UGAM	6	3	0	3	6	3	0	3
24	UDCT	0	0	0	0	0	0	0	0
28	UAPD	0	0	0	0	0	0	0	0
34	LSCL	60	60	60	60	60	60	60	60
35	UDCI	0	0	0	0	0	0	0	0

No.	Name	Multi Window			
		Favorites			
		Vivid	Standard	Pro	Reserved
11	UPOF	31	31	31	31
12	UBOF	31	31	35	47
13	UCOF	31	31	31	31
14	UHOF	31	31	31	31
15	AXIS	2	2	2	2
20	UGAM	6	3	0	3
24	UDCT	0	0	0	0
28	UAPD	0	0	0	0
34	LSCL	60	60	60	60
35	UDCI	0	0	0	0

Standards *3

No.	Name	AXIS=0	AXIS=1	AXIS=2	AXIS=3
16	RYB	24	68	35	70
17	RYR	91	103	130	160
18	GYB	91	69	91	91
19	GYR	127	122	127	127

Standards *4

No.	Name	UGAM=0	UGAM=1	UGAM=2	UGAM=3	UGAM=4	UGAM=5	UGAM=6	UGAM=7
21	RGAM	0	1	2	3	4	5	6	7
22	GGAM	0	1	2	3	4	5	6	7
23	BGAM	0	1	2	3	4	5	6	7

No.	Name	UGAM=8	UGAM=9	UGAM=10	UGAM=11	UGAM=12	UGAM=13	UGAM=14	UGAM=15
21	RGAM	8	9	10	11	12	13	14	15
22	GGAM	8	9	10	11	12	13	14	15
23	BGAM	8	9	10	11	12	13	14	15

Standards *5

No.	Name	UDCT=0	UDCT=1	UDCT=2	UDCT=3	UDCT=4	UDCT=5	UDCT=6	UDCT=7
25	DCTR	0	1	2	3	4	5	6	7
26	DCT1	0	0	0	0	0	0	0	0
27	DCT2	2	2	2	2	2	2	2	2

No.	Name	UDCT=8	UDCT=9	UDCT=10	UDCT=11	UDCT=12	UDCT=13	UDCT=14	UDCT=15
25	DCTR	8	9	10	11	12	13	14	15
26	DCT1	0	0	0	0	0	0	0	0
27	DCT2	2	2	2	2	2	2	2	2

Standards *6

No.	Name	UAPD=0	UAPD=1	UAPD=2	UAPD=3	UAPD=4	UAPD=5	UAPD=6	UAPD=7
29	APDL	0	1	2	3	4	5	6	7
30	APDK	0	16	16	16	16	16	16	16
31	APDD	0	8	8	8	8	8	8	8
32	APDA	0	15	15	15	15	15	15	15
33	APDH	0	0	0	0	0	0	0	0

No.	Name	UAPD=8	UAPD=9	UAPD=10	UAPD=11	UAPD=12	UAPD=13	UAPD=14	UAPD=15
29	APDL	8	9	10	11	12	13	14	15
30	APDK	16	16	16	16	16	16	16	16
31	APDD	8	8	8	8	8	8	8	8
32	APDA	15	15	15	15	15	15	15	15
33	APDH	0	0	0	0	0	0	0	0

Standards *7

No.	Name	UDCI=0	UDCI=1	UDCI=2	UDCI=3	UDCI=4	UDCI=5	UDCI=6	UDCI=7
36	DCIE	0	1	1	1	1	1	1	1
37	DAUT	0	1	1	1	1	1	1	1
38	DGAI	0	4	8	12	16	20	24	28
39	DLPF	0	2	2	2	2	2	2	2
40	DINF	0	38	38	38	38	38	38	38

No.	Name	UDCI=8	UDCI=9	UDCI=10	UDCI=11	UDCI=12	UDCI=13	UDCI=14	UDCI=15
36	DCIE	1	1	1	1	1	1	1	1
37	DAUT	1	1	1	1	1	1	1	1
38	DGAI	32	36	40	44	48	52	56	60
39	DLPF	2	2	2	2	2	2	2	2
40	DINF	38	38	38	38	38	38	38	38

Standards *8

No.	Name	Vivid	Standard	Pro
43	LPSW	0	1	0

DCP-AVP

Functionality		Data	Remarks
No.	Name		
0	AGAM	*1	
1	ADCI	*2	
2	AAPD	*2	
3	ADCT	*2	
4	AAXI	*3	
5	UNRL	*4	
6	BNRL	*5	

Standards *1

No.	Name	Gamma Correction		
		Low	Middle	High
0	AGAM	3	6	8

Standards *2

No.	Name	Dark Correction		
		Low	Middle	High
1	ADCI	2	4	6
2	AAPD	4	8	12
3	ADCT	4	6	8

Standards *3

No.	Name	Color Correction
		On
4	AAXI	3

Standards *4

No.	Name	User NR Level			
		Off : UNRT = 0	Low : UNRT = 1	Middle : UNRT = 2	High : UNRT = 3
5	UNRL	4	5	6	7

Standards *5

No.	Name	User BNR Level			
		Off : UBNR = 0	Low : UBNR = 1	Middle : UBNR = 2	High : UBNR = 3
6	BNRL	0	1	2	3

USR-NR

Functionality		Data	Rremarks
No.	Name		
1	NRLV	*1	
2	RNRP	*1	

Standards *1

No.	Name	UNRL = 0	UNRL = 1	UNRL = 2	UNRL = 3	UNRL = 4	UNRL = 5	UNRL = 6	UNRL = 7
1	NRLV	0	1	2	3	4	5	6	7
2	RNRP	0	0	0	0	0	0	0	0

CXA2171

Functionality		Data	Remarks
No.	Name		
0	MTRX	*1	
1	GAIN	*2	
2	CBGN	*2	
3	VTC	1	
4	HWID	1	
5	HSEP	*2	
6	FRGB	0	
7	HMSK	0	
8	DMST	*2	
9	CLGT	*2	

Standards *1

No.	Name	VIDEO5				VIDEO6			
		480i	480p	1080i	720p	480i	480p	1080i	720p
0	MTRX	0	0	1	1	0	0	1	1

No.	Name	ATSC					DVI
		480i	480p	1080i	720p	MS	
0	MTRX	0	0	1	1	1	0

Standards *2

No.	Name	VIDEO5				VIDEO6			
		480i	480p	1080i	720p	480i	480p	1080i	720p
1	GAIN	0	0	0	0	0	0	0	0
2	CBGN	7	7	7	7	7	7	7	7
5	HSEP	1	1	0	0	1	1	0	0
8	DMST	0	0	0	0	0	0	0	0
9	CLGT	0	0	1	1	0	0	1	1

No.	Name	ATSC					DVI			
		480i	480p	1080i	720p	MS	480i	480p	1080i	720p
1	GAIN	0	0	0	0	0	0	0	0	0
2	CBGN	7	7	7	7	7	7	7	7	7
5	HSEP	1	1	0	0	0	1	1	0	0
8	DMST	0	0	0	0	0	0	0	0	0
9	CLGT	0	0	1	1	1	0	0	1	1

AP

Functionality		Data	Remarks
No.	Name		
0	SVOL	*1	
1	STRE	*1	
2	SBAS	*1	
3	BBE	*1	
4	BBEL	*1	
5	BBEH	*1	
6	MOD1	0	
7	MOD2	1	
8	MOD3	0	
9	AGCL	0	

Standards *1

No.	Name	60"											
		Virtual Dolby			TruSurround			Simulated			O thers		
		UV	ATSC	Others	UV	ATSC	Others	UV	ATSC	Others	UV	ATSC	Others
0	SVOL	0	2	2	0	4	4	0	5	5	0	5	5
1	STRE	2	9	9	2	9	9	2	9	9	2	9	9
2	SBAS	2	9	9	2	9	9	2	9	9	2	9	9
3	BBE	1	1	1	1	1	1	1	1	1	1	1	1
4	BBEL	0	3	3	0	3	3	0	3	3	0	3	3
5	BBEH	4	8	8	4	8	8	4	8	8	4	8	8

No.	Name	70"											
		Virtual Dolby			TruSurround			Simulated			Others		
		UV	ATSC	Others	UV	ATSC	Others	UV	ATSC	Others	UV	ATSC	Others
0	SVOL	0	2	2	0	4	4	0	5	5	0	5	5
1	STRE	2	10	10	2	10	10	2	10	10	2	10	10
2	SBAS	2	10	10	2	10	10	2	10	10	2	10	10
3	BBE	1	1	1	1	1	1	1	1	1	1	1	1
4	BBEL	1	5	5	1	5	5	1	5	5	1	5	5
5	BBEH	4	7	7	4	7	7	4	7	7	4	7	7

DLBY

Functionality		Data	Remarks
No.	Name		
0	DBMD	0	
1	SCH	0	
2	ADSW	0	
3	CECH	0	
4	DELY	7	
5	SSEL	0	

SNNR

Functionality		Data	Remarks
No.	Name		
0	SNNR	0	
1	SNFX	0	
2	YNLV	*1	
3	HIST	*1	
4	PSCH	*1	
5	PFUP	*1	
6	PSHP	*1	
7	PYNR	*1	
8	PCNR	*1	
9	PVGA	*1	
10	PRNR	*1	
11	DSHP	*1	
12	DSF0	*1	
13	DLTI	*1	
14	DCTI	*1	
15	DHFB	*1	
16	MINR	*1	
17	VRAO	*1	
18	VRBO	*1	

Standards *1

No.	Name	SNNR0	SNNR1	SNNR2	SNNR3
2	YNLV	-	30	60	80
3	HIST	-	4	4	4
4	PSCH	0	0	1	1
5	PFUP	0	0	1	2
6	PSHP	0	0	0	1
7	PYNR	0	0	0	1
8	PCNR	0	0	0	1
9	PVGA	0	0	0	0
10	PRNR	1	1	1	1
11	DSHP	0	1	2	3
12	DSF0	0	0	1	1
13	DLTI	0	0	1	1
14	DCTI	0	3	7	15
15	DHFB	0	3	7	15
16	MINR	0	1	2	3
17	VRAO	0	3	7	15
18	VRBO	0	0	1	3

SNSS

Functionality		Data	Remarks
No.	Name		
0	SNSS	0	
1	SSFX	0	
2	YNLV	*1	
3	HIST	*1	
4	PSYF	*1	
5	PAFG	*1	
6	PLOG	*1	
7	PHSL	*1	
8	PVSL	*1	

Standards *1

No.	Name	SNSS0	SNSS1	SNSS2
2	YNLV	-	20	255
3	HIST	-	7	7
4	PSYF	0	0	0
5	PAFG	0	1	3
6	PLOG	0	0	3
7	PHSL	0	0	0
8	PVSL	0	0	0

DRCVR

Functionality		Data	Remarks
No.	Name		
0	23PD	*1	
1	MFVR	0	
2	RESO	*2	
3	NOCT	*2	
4	FMAT	0	
5	FMTH	*1	
6	FSEL	*1	
7	CDLY	*1	
8	LMIT	0	
9	LMLV	*3	
10	LMSL	1	
11	VDLY	1	
12	VDPR	3	
13	WPLL	2	
14	CRCT	0	
15	CHG1	2	
16	CHG2	4	
17	CHG3	6	
18	STP1	1	
19	STP2	2	
20	STP3	3	
21	STP4	4	
22	RSOF	*4	
23	NCOF	*4	

Standards *1

No.	Name	UV	Video1	Video2	Video3	Video4	Video5 (Component1)	Video6 (Component2)	ATSC
0	23PD	1	1	1	1	1	1	1	1
5	FMTH	1	1	1	1	1	1	1	1
6	FSEL	1	1	1	1	1	1	1	1
7	CDLY	2	2	2	2	2	2	2	2

No.	Name	Video7 (DVI)	AV-MULTI (YCbCr)	i.LINK (Except DV)	i.LINK (DV)
0	23PD	1	1	1	1
5	FMTH	1	1	1	1
6	FSEL	1	0	1	1
7	CDLY	2	1	2	2

Standards *2

No.	Name	Vivid						
		UV	ATSC	Video	Component	DVI	iLINK (Except DV)	iLINK (DV)
2	RESO	59	72	35	72	72	72	72
3	NOCT	218	128	203	128	128	128	128

No.	Name	Standard (Mild Off)						
		UV	ATSC	Video	Component	DVI	iLINK (Except DV)	iLINK (DV)
2	RESO	0	72	0	72	72	72	72
3	NOCT	155	128	141	128	128	128	128

No.	Name	Standard (Mild On)						
		UV	ATSC	Video	Component	DVI	iLINK (Except DV)	iLINK (DV)
2	RESO	190	190	95	190	190	190	190
3	NOCT	155	128	141	128	128	128	128

No.	Name	Pro (Mild Off)						
		UV	ATSC	Video	Component	DVI	iLINK (Except DV)	iLINK (DV)
2	RESO	63	128	89	128	128	128	128
3	NOCT	218	128	201	128	128	128	128

No.	Name	Pro (Mild On)						
		UV	ATSC	Video	Component	DVI	iLINK (Except DV)	iLINK (DV)
2	RESO	190	190	190	190	190	190	190
3	NOCT	218	190	201	190	190	190	190

Standards *3

No.	Name	UV				Except UV			
		Vivid	Standard	Pro	Reserved	Vivid	Home	Pro	Reserved
9	LMLV	2	2	2	2	2	2	2	2

Standards *4

No.	Name	DRC Palette		
		Custom1	Custom2	Custom3
22	RSOF	24	49	24
23	NCOF	0	0	24

CCD

Functionality		Data	Rremarks
No.	Name		
0	HPRM	58	
1	HPRS	58	
2	YSYM	0	
3	CCDI	3	
4	CRIP	4	
5	PHLD	0	
6	CHMK	52	
7	LANG	2	
8	DATA	0	
9	VCHP	0	
10	CLMP	0	
11	SYSV	3	
12	ID1	1	
13	ID1M	3	
14	FPOL	0	
15	BWHT	0	
16	MESH	0	
17	BNBB	1	
18	BNBG	0	
19	BNBR	0	
20	CMP1	2	
21	CMP2	5	
22	CMP3	3	
23	CWHT	3	
24	VSDW	1	
25	BFRQ	0	
26	BPOS	0	
27	BFRM	1	
28	BTIM	0	

OP

Functionality		Data	Remarks
No.	Name		
0	DLY1	4	
1	DLY2	0	
2	DLY3	0	
3	DLY4	4	
4	DLY5	0	
5	DLY6	4	
6	ADLY	15	
7	OSDV	33	
8	OSDH	6	
9	HDPT	1	
10	MSBG	0	
11	RAMW	0	
12	SNON	1	
13	SNO2	0	
14	SSON	1	
15	HLCK	0	
16	XUES	1	
17	AFSO	*1	
18	LIND	*2	
19	MSPR	0	
20	CR68	2	
21	INCH	0	
22	ILLU	1	
23	OSVL	2	
24	OBIT	1	
25	OSMV	48	
26	OSFV	30	
27	VLNO	0	
28	FHIP	15	

Standards *1

No.	Name	UV	VIDEO1	VIDEO2	VIDEO3	VIDEO4 480i	VIDEO5 480i	DVI 480i
17	AFSO	1	1	1	1	1	1	1

Standards *2

No.	Name	Vivid						
		UV	VIDEO1	VIDEO2	VIDEO3	VIDEO4 480i	VIDEO5 480i	DVI 480i
18	LIND	0	0	0	0	0	0	0

No.	Name	Standard						
		UV	VIDEO1	VIDEO2	VIDEO3	VIDEO4 480i	VIDEO5 480i	DVI 480i
18	LIND	0	0	0	0	0	0	0

No.	Name	Pro						
		UV	VIDEO1	VIDEO2	VIDEO3	VIDEO4 480i	VIDEO5 480i	DVI 480i
18	LIND	0	0	0	0	0	0	0

No.	Name	Mild						
		UV	VIDEO1	VIDEO2	VIDEO3	VIDEO4 480i	VIDEO5 480i	DVI 480i
18	LIND	0	0	0	0	0	0	0

ID

Functionality		Data	Remarks
No.	Name		
0	ID0	89	
1	ID1	247	
2	ID2	239	
3	ID3	107	
4	ID4	0	
5	ID5	99	
6	ID6	54	
7	ID7	31	
8	ID8	26	

MID1

Functionality		Data	Rremarks
No.	Name		
0	DHPH	*1	
1	DVPH	*1	
2	DHAR	*1	
3	DVAR	*1	
4	DHPW	*1	
5	DVPW	*1	
6	DYCD	*2	
7	DYSD	*3	
8	DYST	*3	
9	MDHP	*4	
10	MDVP	*5	
11	MDHS	*4	
12	MDHO	*4	
13	MDVS	*5	
14	MDVO	*5	
15	MLDT	*6	
16	MLRA	*6	
17	DBCY	*7	
18	DYSS	*8	
19	MDLO	5	
20	DDGO	1	
21	DANO	0	
22	MPIC	3	
23	MPFB	24	
24	MRIN	1	
25	DCSL	1	
26	DRPD	5	
27	NOFR	0	

Standards *1

No.	Name	Panel-0	Panel-1	Panel-2	Panel-3	Panel-4(ex)
0	DHPH	255	255	103	255	255
1	DVPH	255	255	13	255	255
2	DHAR	255	255	177	255	255
3	DVAR	255	255	199	255	255
4	DHPW	255	255	50	255	255
5	DVPW	255	255	3	255	255

Standards *2

No.	Name	Single			
		Analog 480i	Analog other	Digital 480i	Digital other
6	DYCD	0	0	0	0

No.	Name	Twin	Memo	Favorite	Index
6	DYCD	0	0	0	0

Standards *3

No.	Name	Single			
		YSDLY = 0	YSDLY = 1	YSDLY = 2	YSDLY = 3
7	DYSD	8	7	4	4
8	DYST	9	10	6	8

No.	Name	Single			
		YSDLY = 4	YSDLY = 5	YSDLY = 6	YSDLY = 7
7	DYSD	2	0	0	0
8	DYST	5	3	0	0

No.	Name	Single			
		YSDLY = 8	YSDLY = 9	YSDLY = 10	YSDLY = 11
7	DYSD	0	0	0	0
8	DYST	0	0	0	0

No.	Name	Single			
		YSDLY = 12	YSDLY = 13	YSDLY = 14	YSDLY = 15
7	DYSD	0	0	0	0
8	DYST	0	0	0	0

No.	Name	Other			
		YSDLY = 0	YSDLY = 1	YSDLY = 2	YSDLY = 3
7	DYSD	7	6	4	3
8	DYST	8	7	5	4

No.	Name	Other			
		YSDLY = 4	YSDLY = 5	YSDLY = 6	YSDLY = 7
7	DYSD	2	1	0	0
8	DYST	4	3	0	0

No.	Name	Other			
		YSDLY = 8	YSDLY = 9	YSDLY = 10	YSDLY = 11
7	DYSD	0	0	0	0
8	DYST	0	0	0	0

Standards *4

No.	Name	Panel-0					
		SidePanel	Window SidePanel	Twin(Center)	Favorite	Index	other
9	MDHP	255	255	255	255	255	255
11	MDHS	255	255	255	255	255	255
12	MDHO	255	255	255	255	255	255

No.	Name	Panel-1					
		SidePanel	Window SidePanel	Twin(Center)	Favorite	Index	other
9	MDHP	255	255	255	255	255	255
11	MDHS	255	255	255	255	255	255
12	MDHO	255	255	255	255	255	255

No.	Name	Panel-2 (60")					
		SidePanel	Window SidePanel	Twin(Center)	Favorite	Index	other
9	MDHP	107	255	17	21	255	12
11	MDHS	33	255	33	33	255	224
12	MDHO	46	255	30	46	255	46

No.	Name	60" Default					
		Panel-2					
		SidePanel	Window SidePanel	Twin(Center)	Favorite	Index	other
9	MDHP	107		17	21		12
11	MDHS						
12	MDHO						

No.	Name	Panel-2 (70")					
		SidePanel	Window SidePanel	Twin(Center)	Favorite	Index	other
9	MDHP	105	255	15	19	255	9
11	MDHS	36	255	35	36	255	229
12	MDHO	46	255	30	46	255	46

No.	Name	70" Default					
		Panel-2					
		SidePanel	Window SidePanel	Twin(Center)	Favorite	Index	other
9	MDHP	105		15	19		9
11	MDHS						
12	MDHO						

No.	Name	Panel-3					
		SidePanel	Window SidePanel	Twin(Center)	Favorite	Index	other
9	MDHP	255	255	255	255	255	255
11	MDHS	255	255	255	255	255	255
12	MDHO	255	255	255	255	255	255

No.	Name	Panel-4					
		SidePanel	Window SidePanel	Twin(Center)	Favorite	Index	other
9	MDHP	255	255	255	255	255	255
11	MDHS	255	255	255	255	255	255
12	MDHO	255	255	255	255	255	255

Standards *5

No.	Name	Panel-0			
		Single	Twin(Center)	Favorite	Index
10	MDVP	255	255	255	255
13	MDVS	255	255	255	255
14	MDVO	255	255	255	255

No.	Name	Panel-1			
		Single	Twin(Center)	Favorite	Index
10	MDVP	255	255	255	255
13	MDVS	255	255	255	255
14	MDVO	255	255	255	255

No.	Name	Panel-2			
		Single	Twin(Center)	Favorite	Index
10	MDVP	14	152	14	255
13	MDVS	128	92	128	255
14	MDVO	64	40	64	255

No.	Name	Panel-2			
		Default			
		Single	Twin(Center)	Favorite	Index
10	MDVP	14	152	14	
13	MDVS				
14	MDVO				

No.	Name	Panel-3			
		Single	Twin(Center)	Favorite	Index
10	MDVP	255	255	255	255
13	MDVS	255	255	255	255
14	MDVO	255	255	255	255

No.	Name	Panel-4				
		(CRT use)				
		Single 480i-input	Twin(Center)	Favorite	Index	Single 540p-input
10	MDVP	255	255	255	255	255
13	MDVS	255	255	255	255	255
14	MDVO	255	255	255	255	255

Standards *6

No.	Name	Panel-0				Panel-1			
		TWIN/MEMO	Favorite	Index	MS	TWIN/MEMO	Favorite	Index	MS
15	MLDT	255	255	255	255	255	255	255	255
16	MLRA	255	255	255	255	255	255	255	255

No.	Name	Panel-2				Panel-3			
		TWIN/MEMO	Favorite	Index	MS	TWIN/MEMO	Favorite	Index	MS
15	MLDT	7	10	255	32	255	255	255	255
16	MLRA	72	98	255	54	255	255	255	255

No.	Name	Panel-2 (Default)				Panel-3			
		TWIN/MEMO	Favorite	Index	MS	TWIN/MEMO	Favorite	Index	MS
15	MLDT				32				
16	MLRA				0				

No.	Name	Panel-4			
		TWIN/MEMO	Favorite	Index	MS
15	MLDT	255	255	255	255
16	MLRA	255	255	255	255

Standards *7

No.	Name	Single		Free	MS
		SidePanel	other		
17	DBCY	4	4	16	4

No.	Name	other	AutoProgram	All Black	All White
17	DBCY	4	16	1	62

Standards *8

No.	Name	Favorite	Single	Twin/Memo	MS	MS-Movie
18	DYSS	3	3	3	3	3

MID2

Functionality		Data	Remarks
No.	Name		
0	RHPL	*1	
1	RHSL	*1	
2	RVPL	*1	
3	RVSL	*1	
4	RHPR	*1	
5	RHSR	*1	
6	RVPR	*1	
7	RVSR	*1	
8	PABY	1	
9	PACB	0	
10	PAON	0	
11	PANP	0	
12	PACU	0	

Standards *1

No.	Name	Single				
		Component 480i				
		SidePanel	Full	Widezoom	Zoom	Caption
0	RHPL	159	145	145	145	255
1	RHSL	163	170	170	170	255
2	RVPL	49	49	69	105	255
3	RVSL	115	115	105	87	255

No.	Name	Single				
		Composite 480i(CV)				
		SidePanel	Full	Widezoom	Zoom	Caption
0	RHPL	156	141	141	141	255
1	RHSL	163	170	170	170	255
2	RVPL	49	49	69	105	255
3	RVSL	115	115	105	87	255

No.	Name	Single				
		DVI 480i				
		SidePanel	Full	Widezoom	Zoom	Caption
0	RHPL	160	146	146	146	255
1	RHSL	163	170	170	170	255
2	RVPL	48	48	68	104	255
3	RVSL	115	115	105	87	255

No.	Name	Single				
		AVM 480i(YCbCr)				
		SidePanel	Full	Widezoom	Zoom	Caption
0	RHPL	255	255	255	255	255
1	RHSL	255	255	255	255	255
2	RVPL	255	255	255	255	255
3	RVSL	255	255	255	255	255

No.	Name	Single				
		Digital 480i				
		SidePanel	Full	Widezoom	Zoom	Caption
0	RHPL	255	255	255	255	255
1	RHSL	255	255	255	255	255
2	RVPL	255	255	255	255	255
3	RVSL	255	255	255	255	255

No.	Name	Single				
		ATSC 480i				
		SidePanel	Full	Widezoom	Zoom	Caption
0	RHPL	157	143	143	143	255
1	RHSL	164	171	171	171	255
2	RVPL	48	48	70	106	255
3	RVSL	115	115	104	86	255

No.	Name	TWIN/MEMO						
		Component 480i	Composite 480i	DVI 480i	AVM 480i (YCbCr)	Digital 480i	Digital 480i (Side Panel)	ATSC 480i
0	RHPL	143	136	143	143	255	255	141
1	RHSL	167	168	167	167	255	255	168
2	RVPL	56	56	59	59	255	255	55
3	RVSL	111	111	111	111	255	255	111
4	RHPR	159	153	159	159	255	255	156
5	RHSR	167	168	167	167	255	255	168
6	RVPR	56	56	59	59	255	255	55
7	RVSR	111	111	111	111	255	255	111

No.	Name	INDEX	
		Composite 480i	Digital 480i
0	RHPL	255	255
1	RHSL	255	255
2	RVPL	255	255
3	RVSL	255	255

No.	Name	Favorite						
		Component 480i	Composite 480i	DVI 480i	AVM 480i (YCbCr)	Digital 480i	Digital 480i (Side Panel)	ATSC 480i
0	RHPL	152	147	152	255	255	255	152
1	RHSL	165	165	165	255	255	255	165
2	RVPL	48	48	50	255	255	255	49
3	RVSL	115	115	115	255	255	255	115
4	RHPR	255	255	255	255	255	255	
5	RHSR	255	255	255	255	255	255	
6	RVPR	255	255	255	255	255	255	
7	RVSR	255	255	255	255	255	255	

MID3

Functionality		Data	Rremarks
No.	Name		
0	VHPL	*1	
1	VHSL	*1	
2	VVPL	*1	
3	VVSL	*1	
4	VHPR	*1	
5	VHSR	*1	
6	VVPR	*1	
7	VVSR	*1	
8	VCPO	*2	
9	VCWD	*2	
10	VYCD	*2	
11	VSTP	*2	
12	VSTT	*2	
13	VFRV	*2	

Standards *1

No.	Name	TWIN/MEMO				
		Digital 1080i other	Digital 1080i SP	Digital 1035i other	Digital 1035i SP	Component 720p
0	VHPL	255				255
1	VHSL	255				255
2	VVPL	255				255
3	VVSL	255				255
4	VHPR	255	255	255	255	255
5	VHSR	255	255	255	255	255
6	VVPR	255	255	255	255	255
7	VVSR	255	255	255	255	255

No.	Name	TWIN/MEMO			
		AVM 720p(RGB)	AVM 720p(YCbCr)	Digital 720p other	Digital 720p SP
0	VHPL	255	255	255	
1	VHSL	255	255	255	
2	VVPL	255	255	255	
3	VVSL	255	255	255	
4	VHPR	255	255	255	255
5	VHSR	255	255	255	255
6	VVPR	255	255	255	255
7	VVSR	255	255	255	255

No.	Name	TWIN/MEMO			
		Component 480p	AVM 480p(RGB)	AVM 480p(YCbCr)	Digital 480p other
0	VHPL	255	255	255	255
1	VHSL	255	255	255	255
2	VVPL	255	255	255	255
3	VVSL	255	255	255	255
4	VHPR	255	255	255	255
5	VHSR	255	255	255	255
6	VVPR	255	255	255	255
7	VVSR	255	255	255	255

No.	Name	TWIN/MEMO			
		Digital 480p SP	Component 1035i	AVM 1035i(RGB)	AVM 1035i(YCbCr)
0	VHPL	255	255	255	255
1	VHSL	255	255	255	255
2	VVPL	255	255	255	255
3	VVSL	255	255	255	255
4	VHPR	255	255	255	255
5	VHSR	255	255	255	255
6	VVPR	255	255	255	255
7	VVSR	255	255	255	255

No.	Name	TWIN/MEMO				
		Component 480i	Composite 480i	AVM 480i(RGB)	AVM 480i(YCbCr)	DTT 480i other
0	VHPL	255	255	255	255	255
1	VHSL	255	255	255	255	255
2	VVPL	255	255	255	255	255
3	VVSL	255	255	255	255	255
4	VHPR	255	76	255	255	255
5	VHSR	255	84	255	255	255
6	VVPR	255	26	255	255	255
7	VVSR	255	56	255	255	255

No.	Name	TWIN/MEMO			Favorite
		DTT 480i SP	Digital 240p	Digital 120p	Composite 480i
0	VHPL		255	255	
1	VHSL		255	255	
2	VVPL		255	255	
3	VVSL		255	255	
4	VHPR				77
5	VHSR				83
6	VVPR				14
7	VVSR				59

Standards *2

No.	Name	Component 1080i	AVM 1080i(RGB)	AVM 1080i(YCbCr)	Digital 1080i
8	VCPO	0	0	0	0
9	VCWD	0	0	0	0
10	VYCD	0	0	0	0
11	VSTP	0	0	0	0
12	VSTT	0	0	0	0
13	VFRV	0	0	0	0

No.	Name	Component 480p	AVM 480p(RGB)	AVM 480p(YCbCr)	Digital 480p
8	VCPO	0	0	0	0
9	VCWD	0	0	0	0
10	VYCD	0	0	0	0
11	VSTP	0	0	0	0
12	VSTT	0	0	0	0
13	VFRV	0	0	0	0

No.	Name	Component 480i	Composite 480i	AVM 480i(RGB)	AVM 480i(YCbCr)	Analog(DTT)480i
8	VCPO	0	0	0	0	0
9	VCWD	0	0	0	0	0
10	VYCD	0	0	0	0	0
11	VSTP	0	0	0	0	0
12	VSTT	0	0	0	0	0
13	VFRV	0	0	0	0	0

No.	Name	Component 720p	AVM 720p(RGB)	AVM 720p(YCbCr)	Digital 720p
8	VCPO	0	0	0	0
9	VCWD	0	0	0	0
10	VYCD	0	0	0	0
11	VSTP	0	0	0	0
12	VSTT	0	0	0	0
13	VFRV	0	0	0	0

No.	Name	Component 1035i	AVM 1035i(RGB)	AVM 1035i(YCbCr)	Digital 1035i
8	VCPO	0	0	0	0
9	VCWD	0	0	0	0
10	VYCD	0	0	0	0
11	VSTP	0	0	0	0
12	VSTT	0	0	0	0
13	VFRV	0	0	0	0

No.	Name	Digital 480i	Digital 240p	Digital 120p	VGA
8	VCPO	0	0	0	0
9	VCWD	0	0	0	0
10	VYCD	0	0	0	0
11	VSTP	0	0	0	0
12	VSTT	0	0	0	0
13	VFRV	0	0	0	0

MID4

Functionality		Data	Rremarks
No.	Name		
0	DHPL	*1	
1	DHSL	*1	
2	DVPL	*1	
3	DVSL	*1	
4	DHPR	*1	
5	DHSR	*1	
6	DVPR	*1	
7	DVSR	*1	
8	DCPO	*2	
9	DCWD	*2	
10	DYCD	*2	
11	DSTP	*2	
12	DSTT	*2	
13	DFRV	*2	

Standards *1

No.	Name	Single									
		Component 1080i					DVI 1080i(RGB)				
		SidePanel	Full	WideZoom	Zoom	Caption	SidePanel	Full	WideZoom	Zoom	Caption
0	DHPL	255	138	255	255	255	255	138	255	255	255
1	DHSL	255	230	255	255	255	255	230	255	255	255
2	DVPL	255	36	255	255	255	255	36	255	255	255
3	DVSL	255	129	255	255	255	255	129	255	255	255

No.	Name	Single								
		AVM 1080i(YCbCr)				D	igital 1080i			
		SidePanel	Full	WideZoom	Zoom	Caption	Full (1920)	Full (1440)	Full (1280)	SidePanel
0	DHPL	255	255	255	255	255	255	255	255	255
1	DHSL	255	255	255	255	255	255	255	255	255
2	DVPL	255	255	255	255	255	255	255	255	255
3	DVSL	255	255	255	255	255	255	255	255	255

No.	Name	Single									
		Component 720p					DVI 720p(RGB)				
		SidePanel	Full	WideZoom	Zoom	Caption	SidePanel	Full	WideZoom	Zoom	Caption
0	DHPL	255	165	255	255	255	255	164	255	255	255
1	DHSL	255	153	255	255	255	255	153	255	255	255
2	DVPL	255	43	255	255	255	255	47	255	255	255
3	DVSL	255	171	255	255	255	255	171	255	255	255

No.	Name	Single						
		AVM 720p(YCbCr)					Digital 720p	
		SidePanel	Full	WideZoom	Zoom	Caption	Full	SidePanel
0	DHPL	255	255	255	255	255	255	255
1	DHSL	255	255	255	255	255	255	255
2	DVPL	255	255	255	255	255	255	255
3	DVSL	255	255	255	255	255	255	255

No.	Name	Single									
		Component 480p					VGA				
		SidePanel	Full	Widezoom	Zoom	Caption	SidePanel	Full	Widezoom	Zoom	Caption
0	DHPL	210	191	191	191	255	196	179	179	179	255
1	DHSL	217	227	227	227	255	220	229	229	229	255
2	DVPL	45	45	69	105	255	35	35	59	95	255
3	DVSL	116	116	104	86	255	120	120	108	90	255

No.	Name	Single									
		Digital 480p (720)					Digital 480p (640)				
		SidePanel	Full	Widezoom	Zoom	Caption	SidePanel	Full	Widezoom	Zoom	Caption
0	DHPL	255	255	255	255	255	255	255	255	255	255
1	DHSL	255	255	255	255	255	255	255	255	255	255
2	DVPL	255	255	255	255	255	255	255	255	255	255
3	DVSL	255	255	255	255	255	255	255	255	255	255

No.	Name	Single		
		Digital 240p		Digital 120p
		SidePanel	Full (other)	Full (other)
0	DHPL	255	255	255
1	DHSL	255	255	255
2	DVPL	255	255	255
3	DVSL	255	255	255

No.	Name	Single									
		DVI 480p					AVM 480p(YCbCr)				
		SidePanel	Full	Widezoom	Zoom	Caption	SidePanel	Full	Widezoom	Zoom	Caption
0	DHPL	208	188	188	188	255	255	255	255	255	255
1	DHSL	217	227	227	227	255	255	255	255	255	255
2	DVPL	45	45	69	105	255	255	255	255	255	255
3	DVSL	116	116	104	86	255	255	255	255	255	255

No.	Name	Single									
		Component 480i					Composite 480i(CV)				
		SidePanel	Full (other)	Widezoom	Zoom	Caption	SidePanel	Full (other)	Widezoom	Zoom	Caption
0	DHPL	255	255	255	255	255	255	255	255	255	255
1	DHSL	255	255	255	255	255	255	255	255	255	255
2	DVPL	255	255	255	255	255	255	255	255	255	255
3	DVSL	255	255	255	255	255	255	255	255	255	255

No.	Name	Single									
		AVM 480i(RGB)					AVM 480i(YCbCr)				
		SidePanel	Full (other)	Widezoom	Zoom	Caption	SidePanel	Full (other)	Widezoom	Zoom	Caption
0	DHPL	255	255	255	255	255	255	255	255	255	255
1	DHSL	255	255	255	255	255	255	255	255	255	255
2	DVPL	255	255	255	255	255	255	255	255	255	255
3	DVSL	255	255	255	255	255	255	255	255	255	255

No.	Name	Single				
		Digital 480i				
		SidePanel	Full (other)	Widezoom	Zoom	Caption
0	DHPL	255	255	255	255	255
1	DHSL	255	255	255	255	255
2	DVPL	255	255	255	255	255
3	DVSL	255	255	255	255	255

No.	Name	Single									
		ATSC 1080i					ATSC 720p				
		SidePanel	Full (other)	Widezoom	Zoom	Caption	SidePanel	Full (other)	Widezoom	Zoom	Caption
0	DHPL	255	138	255	255	255	255	165	255	255	255
1	DHSL	255	230	255	255	255	255	153	255	255	255
2	DVPL	255	36	255	255	255	255	43	255	255	255
3	DVSL	255	129	255	255	255	255	171	255	255	255

No.	Name	Single									
		ATSC 480p					ATSC 480i(not DRC)				
		SidePanel	Full (other)	Widezoom	Zoom	Caption	SidePanel	Full (other)	Widezoom	Zoom	Caption
0	DHPL	202	184	184	184	255	255	255	255	255	255
1	DHSL	220	229	229	229	255	255	255	255	255	255
2	DVPL	48	48	70	104	255	255	255	255	255	255
3	DVSL	114	114	103	86	255	255	255	255	255	255

No.	Name	Single				
		ATSC MS(1080i)				
			Full (other)			
0	DHPL		138			
1	DHSL		230			
2	DVPL		36			
3	DVSL		129			

No.	Name	Single				
		Component 1035i	AVM 1035i(RGB)	AVM 1035i(YCbCr)	Digital 1035i	
		Full	Full	Full	Full	SidePanel
0	DHPL	255	255	255	255	
1	DHSL	255	255	255	255	
2	DVPL	255	255	255	255	
3	DVSL	255	255	255	255	

No.	Name	TWIN/MEMO									
		Component 1080i	DVI 1080i(RGB)	AVM 1080i(YCbCr)	Digital 1080i(Full)	Digital 1080i(SidePanel)	Component 720p	DVI 720p	AVM 720p(YCbCr)	Digital 720p(Full)	Digital 720p(SidePanel)
0	DHPL	135	135	255	255	255	162	162	255	255	255
1	DHSL	226	226	255	255	255	151	151	255	255	255
2	DVPL	43	43	255	255	255	55	61	255	255	255
3	DVSL	124	124	255	255	255	165	165	255	255	255
4	DHPR	157	157	255	255	255	177	177	255	255	255
5	DHSR	226	226	255	255	255	151	151	255	255	255
6	DVPR	43	43	255	255	255	55	61	255	255	255
7	DVSR	124	124	255	255	255	165	165	255	255	255

No.	Name	TWIN/MEMO									
		Component 480p	DVI 480p(RGB)	AVM 480p(YCbCr)	Digital 480p(Full)	Digital 480p(SidePanel)	Component 1035i	AVM 1035i(RGB)	AVM 1035i(YCbCr)	Digital 1035i	Digital 1035i(Sidepanel)
0	DHPL	186	184	255	255	255	255	255	255	255	255
1	DHSL	224	224	255	255	255	255	255	255	255	255
2	DVPL	53	53	255	255	255	255	255	255	255	255
3	DVSL	112	112	255	255	255	255	255	255	255	255
4	DHPR	208	206	255	255	255	255	255	255	255	255
5	DHSR	224	224	255	255	255	255	255	255	255	255
6	DVPR	53	53	255	255	255	255	255	255	255	255
7	DVSR	112	112	255	255	255	255	255	255	255	255

No.	Name	TWIN/MEMO						
		Component 480i	Composite 480i	AVM 480i(RGB)	AVM 480i(YCbCr)	Digital 480i(Full)	Digital 480i(SidePanel)	VGA
0	DHPL	255	255	255	255	255	255	169
1	DHSL	255	255	255	255	255	255	227
2	DVPL	255	255	255	255	255	255	51
3	DVSL	255	255	255	255	255	255	112
4	DHPR	255	255	255	255	255	255	193
5	DHSR	255	255	255	255	255	255	227
6	DVPR	255	255	255	255	255	255	51
7	DVSR	255	255	255	255	255	255	112

No.	Name	TWIN/MEMO			
		ATSC 1080i	ATSC 720p	ATSC 480p	ATSC 480i
0	DHPL	135	162	179	255
1	DHSL	226	151	226	255
2	DVPL	43	55	57	255
3	DVSL	124	165	110	255
4	DHPR	157	177	202	255
5	DHSR	226	151	226	255
6	DVPR	43	55	57	255
7	DVSR	124	165	110	255

No.	Name	INDEX					
		Component 480i	Digital 1080i	Digital 1035i	Digital 720p	Digital 480p	Digital 480i
0	DHPL	255	255	255	255	255	255
1	DHSL	255	255	255	255	255	255
2	DVPL	255	255	255	255	255	255
3	DVSL	255	255	255	255	255	255
4	DHPR						
5	DHSR						
6	DVPR						
7	DVSR						

No.	Name	Favorite									
		Component 1080i	DVI 1080i	AVM 1080i YCbCr	Digital 1080i(other)	Digital 1080i(SidePanel)	Component 1035i	AVM 1035i RGB	AVM 1035i YCbCr	Digital 1035i(other)	Digital 1035i(SidePanel)
0	DHPL	150	150	255	255	255	255	255	255	255	255
1	DHSL	222	222	255	255	255	255	255	255	255	255
2	DVPL	43	43	255	255	255	255	255	255	255	255
3	DVSL	124	124	255	255	255	255	255	255	255	255

No.	Name	Favorite									
		Component 720p	DVI 720p RGB	AVM 720p YCbCr	Digital 720p(other)	Digital 720p(SidePanel)	Component 480p	DVI 480p	AVM 480p(YCbCr)	Digital 480p(Full)	Digital 480p(SidePanel)
0	DHPL	173	172	255	255	255	200	198	255	255	255
1	DHSL	148	148	255	255	255	220	220	255	255	255
2	DVPL	55	61	255	255	255	45	46	255	255	255
3	DVSL	165	165	255	255	255	116	116	255	255	255

No.	Name	Favorite						
		Component 480i	Composite 480i	AVM 480i(RGB)	AVM 480i(YCbCr)	Digital 480i(Full)	Digital 480i(SidePanel)	VGA
0	DHPL	255	255	255	255	255	255	189
1	DHSL	255	255	255	255	255	255	222
2	DVPL	255	255	255	255	255	255	33
3	DVSL	255	255	255	255	255	255	121

No.	Name	Favorite			
		ATSC 1080i	ATSC 720p	ATSC 480p	ATSC 480i
0	DHPL	150	173	194	255
1	DHSL	222	148	222	255
2	DVPL	43	55	55	255
3	DVSL	124	165	111	255

Standards *2

No.	Name	Component 1080i	AVM 1080i(RGB)	AVM 1080i(YCbCr)	Digital 1080i	Component 720p	AVM 720p(RGB)	AVM 720p(YCbCr)	Digital 720p
8	DCPO	0	0	0	0	0	0	0	0
9	DCWD	0	0	0	0	0	0	0	0
10	DYCD	0	0	0	0	0	0	0	0
11	DSTP	0	0	0	0	0	0	0	0
12	DSTT	0	0	0	0	0	0	0	0
13	DFRV	0	0	0	0	0	0	0	0

No.	Name	Component 480p	AVM 480p(RGB)	AVM 480p(YCbCr)	Digital 480p	Component 1035i	AVM 1035i(RGB)	AVM 1035i(YCbCr)	Digital 1035i
8	DCPO	0	0	0	0	0	0	0	0
9	DCWD	0	0	0	0	0	0	0	0
10	DYCD	0	0	0	0	0	0	0	0
11	DSTP	0	0	0	0	0	0	0	0
12	DSTT	0	0	0	0	0	0	0	0
13	DFRV	0	0	0	0	0	0	0	0

No.	Name	Component 480i	Composite 480i	AVM 480i(RGB)	AVM 480i(YCbCr)	Digital 480i	Digital 240p	Digital 120p	VGA
8	DCPO	0	0	0	0	0	0	0	0
9	DCWD	0	0	0	0	0	0	0	0
10	DYCD	0	0	0	0	0	0	0	0
11	DSTP	0	0	0	0	0	0	0	0
12	DSTT	0	0	0	0	0	0	0	0
13	DFRV	0	0	0	0	0	0	0	0

No.	Name	ATSC 1080i	ATSC 720p	ATSC 480p	ATSC 480i	ATSC MS
8	DCPO	0	0	0	0	0
9	DCWD	0	0	0	0	0
10	DYCD	0	0	0	0	0
11	DSTP	0	0	0	0	0
12	DSTT	0	0	0	0	0
13	DFRV	0	0	0	0	0

MID5

Functionality		Data	Remarks
No.	Name		
0	POP		
1	MHFM	*1	
2	MVFM	*1	
3	MVLS	*1	
4	MHLC	*1	
5	MVLC	*1	
6	MVEC	*1	
7	MXCO	*1	
8	MXHI	*1	
9	MXMO	*1	
10	MXCR	*1	
11	MXCL	*1	
12	MXEN	*1	
13	MXLT	*1	
14	MYCO	*1	
15	MYHI	*1	
16	MYMO	*1	
17	MYCR	*1	
18	MYCL	*1	
19	MYEN	*1	
20	MYLT	*1	
21	MKMO	*1	
22	MKCO	*1	
23	MKCL	*1	
24	MKEN	*1	
25	MKLT	*1	
26	MKTH	*1	
27	MKDW	*1	

Standards *1

No.	Name	Reserved				UV			
		Pro	Pro+	Standard	Vivid	Pro	Pro+	Standard	Vivid
		POP=0	POP=1	POP=2	POP=3	POP=4	POP=5	POP=6	POP=7
1	MHFM	3	3	3	3	3	3	3	3
2	MVFM	3	3	3	3	3	3	3	3
3	MVLS	0	0	0	0	1	1	0	0
4	MHLC	1	1	1	1	3	3	3	3
5	MVLC	0	0	0	0	3	4	2	2
6	MVEC	0	0	0	0	1	1	1	1
7	MXCO	0	0	0	0	1	1	1	1
8	MXHI	0	0	0	0	0	0	0	0
9	MXMO	1	1	1	1	0	0	0	0
10	MXCR	2	2	2	2	2	2	2	2
11	MXCL	3	3	3	3	3	3	3	3
12	MXEN	0	3	5	7	2	4	6	7
13	MXLT	2	2	2	2	3	3	3	3
14	MYCO	0	0	0	0	5	5	5	5
15	MYHI	0	0	0	0	0	0	0	0
16	MYMO	1	1	1	1	0	0	0	0
17	MYCR	2	2	2	2	2	2	2	2
18	MYCL	3	3	3	3	3	3	3	3
19	MYEN	0	3	5	7	0	0	0	0
20	MYLT	2	2	2	2	3	3	3	3
21	MKMO	1	1	1	1	0	0	0	0
22	MKCO	2	2	2	2	1	1	1	1
23	MKCL	3	3	3	3	0	0	0	0
24	MKEN	0	2	3	4	0	0	0	0
25	MKLT	2	2	2	2	3	3	3	3
26	MKTH	0	0	0	0	0	0	0	0
27	MKDW	0	0	0	0	0	0	0	0

No.	Name	Video				iLINK(DV)			
		Pro	Pro+	Standard	Vivid	Pro	Pro+	Standard	Vivid
		POP=8	POP=9	POP=10	POP=11	POP=12	POP=13	POP=14	POP=15
1	MHFM	3	3	3	3	3	3	3	3
2	MVFM	3	3	3	3	3	3	3	3
3	MVLS	1	1	0	0	1	1	0	0
4	MHLC	3	3	3	3	3	3	3	3
5	MVLC	3	4	2	2	1	4	0	0
6	MVEC	1	1	1	1	1	1	1	1
7	MXCO	1	1	1	1	3	3	3	3
8	MXHI	0	0	0	0	0	0	0	0
9	MXMO	0	0	0	0	1	1	1	1
10	MXCR	2	2	2	2	1	1	1	1
11	MXCL	3	3	3	3	2	2	2	2
12	MXEN	2	4	6	7	2	4	6	7
13	MXLT	3	3	3	3	2	2	2	2
14	MYCO	5	5	5	5	0	0	0	0
15	MYHI	0	0	0	0	0	0	0	0
16	MYMO	0	0	0	0	1	1	1	1
17	MYCR	2	2	2	2	1	1	1	1
18	MYCL	3	3	3	3	2	2	2	2
19	MYEN	0	1	2	3	2	4	6	7
20	MYLT	3	3	3	3	2	2	2	2
21	MKMO	0	0	0	0	0	0	1	1
22	MKCO	1	1	1	1	0	0	1	1
23	MKCL	0	0	0	0	0	0	3	3
24	MKEN	0	0	0	0	0	0	7	7
25	MKLT	3	3	3	3	0	0	3	3
26	MKTH	0	0	0	0	0	0	0	0
27	MKDW	0	0	0	0	0	0	0	0

No.	Name	ATSC(480i)				ATSC(480p)			
		Pro	Pro+	Standard	Vivid	Pro	Pro+	Standard	Vivid
		POP=16	POP=17	POP=18	POP=19	POP=20	POP=21	POP=22	POP=23
1	MHFM	3	3	3	3	3	3	3	3
2	MVFM	3	3	3	3	3	3	3	3
3	MVLS	1	1	0	0	1	1	0	0
4	MHLC	3	3	3	3	3	3	3	3
5	MVLC	1	4	0	0	2	6	0	0
6	MVEC	1	1	1	1	1	1	1	1
7	MXCO	3	3	3	3	3	3	3	3
8	MXHI	0	0	0	0	0	0	0	0
9	MXMO	1	1	1	1	1	1	1	1
10	MXCR	1	1	1	1	1	1	1	1
11	MXCL	2	2	2	2	2	2	2	2
12	MXEN	2	4	6	7	2	4	6	7
13	MXLT	2	2	2	2	2	2	2	2
14	MYCO	0	0	0	0	0	0	0	0
15	MYHI	0	0	0	0	0	0	0	0
16	MYMO	1	1	1	1	1	1	1	1
17	MYCR	1	1	1	1	1	1	1	1
18	MYCL	2	2	2	2	2	2	2	2
19	MYEN	2	4	6	7	2	4	6	7
20	MYLT	2	2	2	2	2	2	2	2
21	MKMO	0	0	1	1	0	0	1	1
22	MKCO	0	0	1	1	0	0	1	1
23	MKCL	0	0	3	3	0	0	3	3
24	MKEN	0	0	7	7	0	0	7	7
25	MKLT	0	0	3	3	0	0	3	3
26	MKTH	0	0	0	0	0	0	0	0
27	MKDW	0	0	0	0	0	0	0	0

No.	Name	ATSC(1080i)				ATSC(720p)			
		Pro	Pro+	Standard	Vivid	Pro	Pro+	Standard	Vivid
		POP=24	POP=25	POP=26	POP=27	POP=28	POP=29	POP=30	POP=31
1	MHFM	2	2	2	2	2	2	2	2
2	MVFM	2	2	2	2	2	2	2	2
3	MVLS	0	0	0	0	0	0	0	0
4	MHLC	2	2	2	2	2	2	2	2
5	MVLC	0	0	0	0	0	0	0	0
6	MVEC	1	1	1	1	1	1	1	1
7	MXCO	1	1	1	1	1	1	1	1
8	MXHI	0	0	0	0	0	0	0	0
9	MXMO	1	1	1	1	1	1	1	1
10	MXCR	1	1	1	1	1	1	1	1
11	MXCL	2	2	2	2	2	2	2	2
12	MXEN	2	4	6	7	2	4	6	7
13	MXLT	3	3	3	3	3	3	3	3
14	MYCO	0	0	0	0	0	0	0	0
15	MYHI	0	0	0	0	0	0	0	0
16	MYMO	1	1	1	1	1	1	1	1
17	MYCR	1	1	1	1	1	1	1	1
18	MYCL	2	2	2	2	2	2	2	2
19	MYEN	2	2	4	7	2	2	4	7
20	MYLT	3	3	3	3	3	3	3	3
21	MKMO	0	0	1	1	0	0	1	1
22	MKCO	0	0	1	1	0	0	1	1
23	MKCL	0	0	2	2	0	0	2	2
24	MKEN	0	2	4	7	0	2	4	7
25	MKLT	0	0	3	3	0	0	3	3
26	MKTH	0	0	0	0	0	0	0	0
27	MKDW	0	0	0	0	0	0	0	0

No.	Name	iLINK(480i)				iLINK(480p)			
		Pro	Pro+	Standard	Vivid	Pro	Pro+	Standard	Vivid
		POP=32	POP=33	POP=34	POP=35	POP=36	POP=37	POP=38	POP=39
1	MHFM	3	3	3	3	3	3	3	3
2	MVFM	3	3	3	3	3	3	3	3
3	MVLS	1	1	0	0	1	1	0	0
4	MHLC	3	3	3	3	3	3	3	3
5	MVLC	1	4	0	0	2	6	0	0
6	MVEC	1	1	1	1	1	1	1	1
7	MXCO	3	3	3	3	3	3	3	3
8	MXHI	0	0	0	0	0	0	0	0
9	MXMO	1	1	1	1	1	1	1	1
10	MXCR	1	1	1	1	1	1	1	1
11	MXCL	2	2	2	2	2	2	2	2
12	MXEN	2	4	6	7	2	4	6	7
13	MXLT	2	2	2	2	2	2	2	2
14	MYCO	0	0	0	0	0	0	0	0
15	MYHI	0	0	0	0	0	0	0	0
16	MYMO	1	1	1	1	1	1	1	1
17	MYCR	1	1	1	1	1	1	1	1
18	MYCL	2	2	2	2	2	2	2	2
19	MYEN	2	4	6	7	2	4	6	7
20	MYLT	2	2	2	2	2	2	2	2
21	MKMO	0	0	1	1	0	0	1	1
22	MKCO	0	0	1	1	0	0	1	1
23	MKCL	0	0	3	3	0	0	3	3
24	MKEN	0	0	7	7	0	0	7	7
25	MKLT	0	0	3	3	0	0	3	3
26	MKTH	0	0	0	0	0	0	0	0
27	MKDW	0	0	0	0	0	0	0	0

No.	Name	iLINK(1080i)				iLINK(720p)			
		Pro	Pro+	Standard	Vivid	Pro	Pro+	Standard	Vivid
		POP=40	POP=41	POP=42	POP=43	POP=44	POP=45	POP=46	POP=47
1	MHFM	2	2	2	2	2	2	2	2
2	MVFM	2	2	2	2	2	2	2	2
3	MVLS	0	0	0	0	0	0	0	0
4	MHLC	2	2	2	2	2	2	2	2
5	MVLC	0	0	0	0	0	0	0	0
6	MVEC	1	1	1	1	1	1	1	1
7	MXCO	1	1	1	1	1	1	1	1
8	MXHI	0	0	0	0	0	0	0	0
9	MXMO	1	1	1	1	1	1	1	1
10	MXCR	1	1	1	1	1	1	1	1
11	MXCL	2	2	2	2	2	2	2	2
12	MXEN	2	4	6	7	2	4	6	7
13	MXLT	3	3	3	3	3	3	3	3
14	MYCO	0	0	0	0	0	0	0	0
15	MYHI	0	0	0	0	0	0	0	0
16	MYMO	1	1	1	1	1	1	1	1
17	MYCR	1	1	1	1	1	1	1	1
18	MYCL	2	2	2	2	2	2	2	2
19	MYEN	2	2	4	7	2	2	4	7
20	MYLT	3	3	3	3	3	3	3	3
21	MKMO	0	0	1	1	0	0	1	1
22	MKCO	0	0	1	1	0	0	1	1
23	MKCL	0	0	2	2	0	0	2	2
24	MKEN	0	2	4	7	0	2	4	7
25	MKLT	0	0	3	3	0	0	3	3
26	MKTH	0	0	0	0	0	0	0	0
27	MKDW	0	0	0	0	0	0	0	0

No.	Name	Component(480i)				Component(480p)			
		Pro	Pro+	Standard	Vivid	Pro	Pro+	Standard	Vivid
		POP=48	POP=49	POP=50	POP=51	POP=52	POP=53	POP=54	POP=55
1	MHFM	3	3	3	3	3	3	3	3
2	MVFM	3	3	3	3	3	3	3	3
3	MVLS	1	1	0	0	1	1	0	0
4	MHLC	3	3	3	3	3	3	3	3
5	MVLC	1	4	0	0	2	6	0	0
6	MVEC	1	1	1	1	1	1	1	1
7	MXCO	3	3	3	3	3	3	3	3
8	MXHI	0	0	0	0	0	0	0	0
9	MXMO	1	1	1	1	1	1	1	1
10	MXCR	1	1	1	1	1	1	1	1
11	MXCL	2	2	2	2	2	2	2	2
12	MXEN	2	4	6	7	2	4	6	7
13	MXLT	2	2	2	2	2	2	2	2
14	MYCO	0	0	0	0	0	0	0	0
15	MYHI	0	0	0	0	0	0	0	0
16	MYMO	1	1	1	1	1	1	1	1
17	MYCR	1	1	1	1	1	1	1	1
18	MYCL	2	2	2	2	2	2	2	2
19	MYEN	2	4	6	7	2	4	6	7
20	MYLT	2	2	2	2	2	2	2	2
21	MKMO	0	0	1	1	0	0	1	1
22	MKCO	0	0	1	1	0	0	1	1
23	MKCL	0	0	3	3	0	0	3	3
24	MKEN	0	0	7	7	0	0	7	7
25	MKLT	0	0	3	3	0	0	3	3
26	MKTH	0	0	0	0	0	0	0	0
27	MKDW	0	0	0	0	0	0	0	0

No.	Name	Component(1080i)				Component(720p)			
		Pro	Pro+	Standard	Vivid	Pro	Pro+	Standard	Vivid
		POP=56	POP=57	POP=58	POP=59	POP=60	POP=61	POP=62	POP=63
1	MHFM	2	2	2	2	2	2	2	2
2	MVFM	2	2	2	2	2	2	2	2
3	MVLS	0	0	0	0	0	0	0	0
4	MHLC	2	2	2	2	2	2	2	2
5	MVLC	0	0	0	0	0	0	0	0
6	MVEC	1	1	1	1	1	1	1	1
7	MXCO	1	1	1	1	1	1	1	1
8	MXHI	0	0	0	0	0	0	0	0
9	MXMO	1	1	1	1	1	1	1	1
10	MXCR	1	1	1	1	1	1	1	1
11	MXCL	2	2	2	2	2	2	2	2
12	MXEN	2	4	6	7	2	4	6	7
13	MXLT	3	3	3	3	3	3	3	3
14	MYCO	0	0	0	0	0	0	0	0
15	MYHI	0	0	0	0	0	0	0	0
16	MYMO	1	1	1	1	1	1	1	1
17	MYCR	1	1	1	1	1	1	1	1
18	MYCL	2	2	2	2	2	2	2	2
19	MYEN	2	2	4	7	2	2	4	7
20	MYLT	3	3	3	3	3	3	3	3
21	MKMO	0	0	1	1	0	0	1	1
22	MKCO	0	0	1	1	0	0	1	1
23	MKCL	0	0	2	2	0	0	2	2
24	MKEN	0	2	4	7	0	2	4	7
25	MKLT	0	0	3	3	0	0	3	3
26	MKTH	0	0	0	0	0	0	0	0
27	MKDW	0	0	0	0	0	0	0	0

No.	Name	DVI(480i)				DVI(480p)			
		Pro	Pro+	Standard	Vivid	Pro	Pro+	Standard	Vivid
		POP=64	POP=65	POP=66	POP=67	POP=68	POP=69	POP=70	POP=71
1	MHFM	3	3	3	3	3	3	3	3
2	MVFM	3	3	3	3	3	3	3	3
3	MVLS	1	1	0	0	1	1	0	0
4	MHLC	3	3	3	3	3	3	3	3
5	MVLC	1	4	0	0	2	6	0	0
6	MVEC	1	1	1	1	1	1	1	1
7	MXCO	3	3	3	3	3	3	3	3
8	MXHI	0	0	0	0	0	0	0	0
9	MXMO	1	1	1	1	1	1	1	1
10	MXCR	1	1	1	1	1	1	1	1
11	MXCL	2	2	2	2	2	2	2	2
12	MXEN	2	4	6	7	2	4	6	7
13	MXLT	2	2	2	2	2	2	2	2
14	MYCO	0	0	0	0	0	0	0	0
15	MYHI	0	0	0	0	0	0	0	0
16	MYMO	1	1	1	1	1	1	1	1
17	MYCR	1	1	1	1	1	1	1	1
18	MYCL	2	2	2	2	2	2	2	2
19	MYEN	2	4	6	7	2	4	6	7
20	MYLT	2	2	2	2	2	2	2	2
21	MKMO	0	0	1	1	0	0	1	1
22	MKCO	0	0	1	1	0	0	1	1
23	MKCL	0	0	3	3	0	0	3	3
24	MKEN	0	0	7	7	0	0	7	7
25	MKLT	0	0	3	3	0	0	3	3
26	MKTH	0	0	0	0	0	0	0	0
27	MKDW	0	0	0	0	0	0	0	0

No.	Name	DVI(1080i)				DVI(720p)			
		Pro	Pro+	Standard	Vivid	Pro	Pro+	Standard	Vivid
		POP=72	POP=73	POP=74	POP=75	POP=76	POP=77	POP=78	POP=79
1	MHFM	2	2	2	2	2	2	2	2
2	MVFM	2	2	2	2	2	2	2	2
3	MVLS	0	0	0	0	0	0	0	0
4	MHLC	2	2	2	2	2	2	2	2
5	MVLC	0	0	0	0	0	0	0	0
6	MVEC	1	1	1	1	1	1	1	1
7	MXCO	1	1	1	1	1	1	1	1
8	MXHI	0	0	0	0	0	0	0	0
9	MXMO	1	1	1	1	1	1	1	1
10	MXCR	1	1	1	1	1	1	1	1
11	MXCL	2	2	2	2	2	2	2	2
12	MXEN	2	4	6	7	2	4	6	7
13	MXLT	3	3	3	3	3	3	3	3
14	MYCO	0	0	0	0	0	0	0	0
15	MYHI	0	0	0	0	0	0	0	0
16	MYMO	1	1	1	1	1	1	1	1
17	MYCR	1	1	1	1	1	1	1	1
18	MYCL	2	2	2	2	2	2	2	2
19	MYEN	2	2	4	7	2	2	4	7
20	MYLT	3	3	3	3	3	3	3	3
21	MKMO	0	0	1	1	0	0	1	1
22	MKCO	0	0	1	1	0	0	1	1
23	MKCL	0	0	2	2	0	0	2	2
24	MKEN	0	2	4	7	0	2	4	7
25	MKLT	0	0	3	3	0	0	3	3
26	MKTH	0	0	0	0	0	0	0	0
27	MKDW	0	0	0	0	0	0	0	0

No.	Name	DVI(VGA)				Memory Strick(Still)			
		Pro	Pro+	Standard	Vivid	Pro	Pro+	Standard	Vivid
		POP=80	POP=81	POP=82	POP=83	POP=84	POP=85	POP=86	POP=87
1	MHFM	3	3	3	3	2	2	2	2
2	MVFM	3	3	3	3	2	2	2	2
3	MVLS	1	1	0	0	0	0	0	0
4	MHLC	3	3	3	3	2	2	2	2
5	MVLC	2	6	0	0	0	0	0	0
6	MVEC	1	1	1	1	1	1	1	1
7	MXCO	3	3	3	3	0	1	1	1
8	MXHI	0	0	0	0	0	0	0	0
9	MXMO	1	1	1	1	0	1	1	1
10	MXCR	1	1	1	1	0	1	1	1
11	MXCL	2	2	2	2	0	2	2	2
12	MXEN	2	4	6	7	0	1	1	1
13	MXLT	2	2	2	2	0	3	3	3
14	MYCO	0	0	0	0	0	0	0	0
15	MYHI	0	0	0	0	0	0	0	0
16	MYMO	1	1	1	1	0	1	1	1
17	MYCR	1	1	1	1	0	1	1	1
18	MYCL	2	2	2	2	0	2	2	2
19	MYEN	2	4	6	7	0	1	1	1
20	MYLT	2	2	2	2	0	3	3	3
21	MKMO	0	0	1	1	0	0	0	0
22	MKCO	0	0	1	1	0	0	0	0
23	MKCL	0	0	3	3	0	0	0	0
24	MKEN	0	0	7	7	0	0	0	0
25	MKLT	0	0	3	3	0	0	0	0
26	MKTH	0	0	0	0	0	0	0	0
27	MKDW	0	0	0	0	0	0	0	0

No.	Name	Memory Strick(Movie : Control Panel)				Reserved			
		Pro	Pro+	Standard	Vivid	Pro	Pro+	Standard	Vivid
		POP=88	POP=89	POP=90	POP=91	POP=92	POP=93	POP=94	POP=95
1	MHFM	2	2	2	2	0	0	0	0
2	MVFM	2	2	2	2	0	0	0	0
3	MVLS	0	0	0	0	0	0	0	0
4	MHLC	2	2	2	2	0	0	0	0
5	MVLC	0	0	0	0	0	0	0	0
6	MVEC	1	1	1	1	0	0	0	0
7	MXCO	0	1	1	1	0	0	0	0
8	MXHI	0	0	0	0	0	0	0	0
9	MXMO	0	1	1	1	0	0	0	0
10	MXCR	0	1	1	1	0	0	0	0
11	MXCL	0	2	2	2	0	0	0	0
12	MXEN	0	1	2	3	0	0	0	0
13	MXLT	0	3	3	3	0	0	0	0
14	MYCO	0	0	0	0	0	0	0	0
15	MYHI	0	0	0	0	0	0	0	0
16	MYMO	0	1	1	1	0	0	0	0
17	MYCR	0	1	1	1	0	0	0	0
18	MYCL	0	2	2	2	0	0	0	0
19	MYEN	0	1	2	3	0	0	0	0
20	MYLT	0	3	3	3	0	0	0	0
21	MKMO	0	0	0	0	0	0	0	0
22	MKCO	0	0	0	0	0	0	0	0
23	MKCL	0	0	0	0	0	0	0	0
24	MKEN	0	0	0	0	0	0	0	0
25	MKLT	0	0	0	0	0	0	0	0
26	MKTH	0	0	0	0	0	0	0	0
27	MKDW	0	0	0	0	0	0	0	0

No.	Name	Memory Strick(Movie : Low Quality)				R eserved			
		Pro	Pro+	Standard	Vivid	Pro	Pro+	Standard	Vivid
		POP=96	POP=97	POP=98	POP=99	POP=100	POP=101	POP=102	POP=103
1	MHFM	2	2	2	2	0	0	0	0
2	MVFM	2	2	2	2	0	0	0	0
3	MVLS	0	0	0	0	0	0	0	0
4	MHLC	2	2	2	2	0	0	0	0
5	MVLC	0	0	0	0	0	0	0	0
6	MVEC	1	1	1	1	0	0	0	0
7	MXCO	0	1	1	1	0	0	0	0
8	MXHI	0	0	0	0	0	0	0	0
9	MXMO	0	1	1	1	0	0	0	0
10	MXCR	0	1	1	1	0	0	0	0
11	MXCL	0	2	2	2	0	0	0	0
12	MXEN	0	1	2	3	0	0	0	0
13	MXLT	0	3	3	3	0	0	0	0
14	MYCO	0	0	0	0	0	0	0	0
15	MYHI	0	0	0	0	0	0	0	0
16	MYMO	0	1	1	1	0	0	0	0
17	MYCR	0	1	1	1	0	0	0	0
18	MYCL	0	2	2	2	0	0	0	0
19	MYEN	0	1	2	3	0	0	0	0
20	MYLT	0	3	3	3	0	0	0	0
21	MKMO	0	0	0	0	0	0	0	0
22	MKCO	0	0	0	0	0	0	0	0
23	MKCL	0	0	0	0	0	0	0	0
24	MKEN	0	0	0	0	0	0	0	0
25	MKLT	0	0	0	0	0	0	0	0
26	MKTH	0	0	0	0	0	0	0	0
27	MKDW	0	0	0	0	0	0	0	0

No.	Name	Reserved							
		Pro	Pro+	Standard	Vivid	Pro	Pro+	Standard	Vivid
		POP=104	POP=105	POP=106	POP=107	POP=108	POP=109	POP=110	POP=111
1	MHFM	0	0	0	0	0	0	0	0
2	MVFM	0	0	0	0	0	0	0	0
3	MVLS	0	0	0	0	0	0	0	0
4	MHLC	0	0	0	0	0	0	0	0
5	MVLC	0	0	0	0	0	0	0	0
6	MVEC	0	0	0	0	0	0	0	0
7	MXCO	0	0	0	0	0	0	0	0
8	MXHI	0	0	0	0	0	0	0	0
9	MXMO	0	0	0	0	0	0	0	0
10	MXCR	0	0	0	0	0	0	0	0
11	MXCL	0	0	0	0	0	0	0	0
12	MXEN	0	0	0	0	0	0	0	0
13	MXLT	0	0	0	0	0	0	0	0
14	MYCO	0	0	0	0	0	0	0	0
15	MYHI	0	0	0	0	0	0	0	0
16	MYMO	0	0	0	0	0	0	0	0
17	MYCR	0	0	0	0	0	0	0	0
18	MYCL	0	0	0	0	0	0	0	0
19	MYEN	0	0	0	0	0	0	0	0
20	MYLT	0	0	0	0	0	0	0	0
21	MKMO	0	0	0	0	0	0	0	0
22	MKCO	0	0	0	0	0	0	0	0
23	MKCL	0	0	0	0	0	0	0	0
24	MKEN	0	0	0	0	0	0	0	0
25	MKLT	0	0	0	0	0	0	0	0
26	MKTH	0	0	0	0	0	0	0	0
27	MKDW	0	0	0	0	0	0	0	0

No.	Name	Reserved							
		Pro	Pro+	Standard	Vivid	Pro	Pro+	Standard	Vivid
		POP=112	POP=113	POP=114	POP=115	POP=116	POP=117	POP=118	POP=119
1	MHFM	0	0	0	0	0	0	0	0
2	MVFM	0	0	0	0	0	0	0	0
3	MVLS	0	0	0	0	0	0	0	0
4	MHLC	0	0	0	0	0	0	0	0
5	MVLC	0	0	0	0	0	0	0	0
6	MVEC	0	0	0	0	0	0	0	0
7	MXCO	0	0	0	0	0	0	0	0
8	MXHI	0	0	0	0	0	0	0	0
9	MXMO	0	0	0	0	0	0	0	0
10	MXCR	0	0	0	0	0	0	0	0
11	MXCL	0	0	0	0	0	0	0	0
12	MXEN	0	0	0	0	0	0	0	0
13	MXLT	0	0	0	0	0	0	0	0
14	MYCO	0	0	0	0	0	0	0	0
15	MYHI	0	0	0	0	0	0	0	0
16	MYMO	0	0	0	0	0	0	0	0
17	MYCR	0	0	0	0	0	0	0	0
18	MYCL	0	0	0	0	0	0	0	0
19	MYEN	0	0	0	0	0	0	0	0
20	MYLT	0	0	0	0	0	0	0	0
21	MKMO	0	0	0	0	0	0	0	0
22	MKCO	0	0	0	0	0	0	0	0
23	MKCL	0	0	0	0	0	0	0	0
24	MKEN	0	0	0	0	0	0	0	0
25	MKLT	0	0	0	0	0	0	0	0
26	MKTH	0	0	0	0	0	0	0	0
27	MKDW	0	0	0	0	0	0	0	0

No.	Name	Reserved							
		Pro	Pro+	Standard	Vivid	Pro	Pro+	Standard	Vivid
		POP=120	POP=121	POP=122	POP=123	POP=124	POP=125	POP=126	POP=127
1	MHFM	0	0	0	0	0	0	0	0
2	MVFM	0	0	0	0	0	0	0	0
3	MVLS	0	0	0	0	0	0	0	0
4	MHLC	0	0	0	0	0	0	0	0
5	MVLC	0	0	0	0	0	0	0	0
6	MVEC	0	0	0	0	0	0	0	0
7	MXCO	0	0	0	0	0	0	0	0
8	MXHI	0	0	0	0	0	0	0	0
9	MXMO	0	0	0	0	0	0	0	0
10	MXCR	0	0	0	0	0	0	0	0
11	MXCL	0	0	0	0	0	0	0	0
12	MXEN	0	0	0	0	0	0	0	0
13	MXLT	0	0	0	0	0	0	0	0
14	MYCO	0	0	0	0	0	0	0	0
15	MYHI	0	0	0	0	0	0	0	0
16	MYMO	0	0	0	0	0	0	0	0
17	MYCR	0	0	0	0	0	0	0	0
18	MYCL	0	0	0	0	0	0	0	0
19	MYEN	0	0	0	0	0	0	0	0
20	MYLT	0	0	0	0	0	0	0	0
21	MKMO	0	0	0	0	0	0	0	0
22	MKCO	0	0	0	0	0	0	0	0
23	MKCL	0	0	0	0	0	0	0	0
24	MKEN	0	0	0	0	0	0	0	0
25	MKLT	0	0	0	0	0	0	0	0
26	MKTH	0	0	0	0	0	0	0	0
27	MKDW	0	0	0	0	0	0	0	0

MID6

Functionality		Data	Rremarks
No.	Name		
1	MBT1	*1	
2	MNHF	*1	
3	MNON	*1	
4	MNOF	*1	
5	MNMO	*1	
6	MNFB	*1	
7	MNGR	*1	
8	MNLR	*1	
9	MNCR	*1	
10	MNCC	*1	
11	MNFL	*1	
12	MNCO	*1	
13	MNMV	*1	

Standards *1

No.	Name	other							
		NRTBL=0	NRTBL=1	NRTBL=2	NRTBL=3	NRTBL=4	NRTBL=5	NRTBL=6	NRTBL=7
1	MBT1	5	5	5	5	5	5	5	5
2	MNHF	0	0	0	0	0	0	0	0
3	MNON	1	1	1	1	1	1	1	1
4	MNOF	1	1	1	1	1	1	1	1
5	MNMO	0	0	0	0	0	0	0	0
6	MNFB	1	2	2	2	0	1	2	2
7	MNGR	1	2	3	3	0	2	3	3
8	MNLR	1	0	1	0	0	1	3	0
9	MNCR	0	0	0	0	0	0	0	0
10	MNCC	0	0	0	0	0	0	0	0
11	MNFL	0	0	0	0	0	0	0	0
12	MNCO	0	0	0	0	0	0	0	0
13	MNMV	0	0	0	0	0	0	0	0

No.	Name	720p							
		NRTBL=0	NRTBL=1	NRTBL=2	NRTBL=3	NRTBL=4	NRTBL=5	NRTBL=6	NRTBL=7
1	MBT1	5	5	5	5	5	5	5	5
2	MNHF	0	0	0	0	0	0	0	0
3	MNON	1	1	1	1	1	1	1	1
4	MNOF	1	1	1	1	1	1	1	1
5	MNMO	0	0	0	0	0	0	0	0
6	MNFB	1	2	2	2	0	1	2	2
7	MNGR	1	2	3	3	0	2	3	3
8	MNLR	1	0	1	0	0	1	3	0
9	MNCR	0	0	0	0	0	0	0	0
10	MNCC	0	0	0	0	0	0	0	0
11	MNFL	0	0	0	0	0	0	0	0
12	MNCO	0	0	0	0	0	0	0	0
13	MNMV	0	0	0	0	0	0	0	0

MID7

Functionality		Data	Rremarks
No.	Name		
0	MION	*1	
1	MIWR	*1	
2	MIMO	*1	
3	MSTA	*1	
4	MF22	*1	
5	MFPH	*1	
6	MIBM	*1	
7	MIUP	*1	
8	MSTP	*1	
9	MSOF	*1	
10	MSTY	*1	
11	MSTC	*1	
12	MIFL	*1	
13	MIHC	*1	
14	MISO	*1	
15	MIMX	*1	
16	MILC	*1	
17	MIRA	*1	
18	MIOR	*1	
19	MIFB	*1	
20	MIVC	*1	
21	MFIF	*1	
22	DIPM	*1	
23	MFOC	*1	
24	MCPA	*1	
25	MSTE	*1	
26	MFLM	*1	
27	MCED	*1	
28	MCCO	*1	
29	MFSL	*1	
30	MVAL	*1	
31	MVIG	*1	

Standards *1

No.	Name	Other	VIVID			STANDARD		
			Single 1080i/1035i	Single 480i(not DRC)	Single other	Single 1080i/1035i	Single 480i(not DRC)	Single other
0	MION	1	1	1	1	1	1	1
1	MIWR	1	1	1	1	1	1	1
2	MIMO	0	0	0	0	0	0	0
3	MSTA	0	0	0	0	0	0	0
4	MF22	0	0	0	0	0	0	0
5	MFPH	0	0	0	0	0	0	0
6	MIBM	1	1	1	1	1	1	1
7	MIUP	1	1	1	1	1	1	1
8	MSTP	1	1	1	1	1	1	1
9	MSOF	4	4	4	4	4	4	4
10	MSTY	4	4	4	4	4	4	4
11	MSTC	4	4	4	4	4	4	4
12	MIFL	0	0	0	0	0	0	0
13	MIHC	4	4	4	4	4	4	4
14	MISO	1	1	1	1	1	1	1
15	MIMX	3	3	3	3	3	3	3
16	MILC	2	2	2	2	2	2	2
17	MIRA	3	3	3	3	3	3	3
18	MIOR	1	1	1	1	1	1	1
19	MIFB	2	2	2	2	2	2	2
20	MIVC	3	3	3	3	3	3	3
21	MFIF	1	1	1	1	1	1	1
22	DIPM	0	0	0	0	0	0	0
23	MFOC	3	3	3	3	3	3	3
24	MCPA	10	10	10	10	10	10	10
25	MSTE	1	1	1	1	1	1	1
26	MFLM	0	0	0	0	0	0	0
27	MCED	8	8	8	8	8	8	8
28	MCCO	8	8	8	8	8	8	8
29	MFSL	0	0	0	0	0	0	0
30	MVAL	0	0	0	0	0	0	0
31	MVIG	0	0	0	0	0	0	0

MID8

Functionality		Data	Rremarks
No.	Name		
0	SHFM	3	
1	SVFM	3	
2	SHLC	0	
3	SVLC	0	
4	SHMO	0	
5	SHLT	0	
6	SHCR	0	
7	SHCL	0	
8	SHEN	0	
9	SHCO	0	
10	SVMO	0	
11	SVLT	0	
12	SVCR	0	
13	SVCL	0	
14	SVEN	0	

MID9

Functionality		Data	Rremarks
No.	Name		
0	SION	1	
1	SISL	2	
2	SIWR	1	
3	SIMV	1	
4	SFIF	1	
5	STLD	1	
6	PAFL	1	
7	SCOU	2	
8	SSTA	1	
9	SSTP	1	
10	IPFL		
11	IPFS		
12	PATS	0	
13	PASE	2	
14	PAR0	0	
15	PAR1	0	
16	PAT1	41	
17	PAT2	81	
18	PAT3	106	
19	PAT5	120	

D9671-1

Functionality		Data	Rremarks
No.	Name		
0	I2CSCAL	49	
1	LUTPERM	1	
2	COPYENAB	1	
3	REFPERM	1	
4	REFLENGT	0	
5	SLAVE	87	
6	INSWAP	5	
7	RINBSWAP	1	
8	GINBSWAP	1	
9	BINBSWAP	1	
10	OUTSWAP	5	
11	ROUTBSWAP	1	
12	GOUTBSWAP	1	
13	BOUTBSWAP	0	
14	OSDTHRU	0	
15	MUTE	0	
16	3DGSW	1	
17	LUTTHRU	0	
18	DOTLINE	9	
19	CSCMODE	0	
20	PWIDTHH	86	
21	PWIDTHL	9	
22	PHEIGHTH	3	
23	PHEIGHTL	19	
24	3DGOFFSET	0	
25	3DGNONL	0	
26	3DGWEGT	2	
27	ROSDGAIN	0	
28	GOSDGAINH	0	
29	GOSDGAINL	0	
30	BOSDGAIN	0	
31	YMOSD	0	
32	IOSD	0	

D9671PIC

Functionality		Data	Remarks
No.	Name		
0	APCMODE	0	
1	APCSW	*1	
2	APCGAIN	*1	
3	APCCORE	*1	
4	APCLIMT	*1	
5	CONTRAST	0	
6	SCON	18	
7	BRT	0	
8	SBRT	50	
9	RGAIN	127	
10	GGAIN	127	
11	BGAIN	127	
12	RBIAS	127	
13	GBIAS	127	
14	BBIAS	127	
15	BLK-LEFH	*2	
16	BLK-LEFL	*2	
17	BLK-RIH	*2	
18	BLK-RIL	*2	
19	BLK-TOH	0	
20	BLK-TOL	0	
21	BLK-BOH	0	
22	BLK-BOL	0	
23	BLK-LEVEL	0	
24	SCONOF	*3	
25	SBRTOF	*3	
26	RGAINOF	*3	
27	GGAINOF	*3	
28	BGAINOF	*3	
29	RBIASOF	*3	
30	GBIASOF	*3	
31	BBIASOF	*3	

Standards *1

No.	Name	APCMODE=0	APCMODE=1	APCMODE=2	APCMODE=3
1	APCSW	0	1	1	1
2	APCGAIN	0	50	40	45
3	APCCORE	0	30	63	10
4	APCLIMT	0	63	30	30

No.	Name	APCMODE=4	APCMODE=5	APCMODE=6	APCMODE=7
1	APCSW	0	0	0	0
2	APCGAIN	64	64	64	64
3	APCCORE	127	127	127	127
4	APCLIMT	64	64	64	64

Standards *2

No.	Name	normal	wide
15	BLK-LEFH	0	0
16	BLK-LEFL	0	0
17	BLK-RIH	0	0
18	BLK-RIL	0	0

Standards *3

No.	Name	Color temp3(Neutral)	Color temp1(Warm)
24	SCONOF	127	123
25	SBRTOF	127	134
26	RGAINOF	141	168
27	GGAINOF	127	144
28	BGAINOF	103	98
29	RBIASOF	128	125
30	GBIASOF	127	124
31	BBIASOF	126	127

D9671TPN

Functionality		Data	Rremarks
No.	Name		
0	TPNSW	0	
1	TRNRGB	7	
2	TPNMODE	0	
3	TPNHV	0	
4	TPNINV	0	
5	TPNREP	0	
6	TPNSLANT	0	
7	TPNWIDTH	80	
8	WINPOSHH	32	
9	WINPOSHL	1	
10	WINPOSVH	1	
11	WINPOSVL	18	
12	RHLVLH	63	
13	RHLVLL	15	
14	GHLVLH	15	
15	GHLVLL	63	
16	BHLVLH	3	
17	BHLVLL	255	
18	RLLVLH	0	
19	RLLVLL	0	
20	GLLVLH	0	
21	GLLVLL	0	
22	BLLVLH	0	
23	BLLVLL	0	

D9671CUR

Functionality		Data	Rremarks
No.	Name		
0	CURBOLD	0	
1	FRMECLIP	1	
2	CROSSIZE	3	
3	CROSON	0	
4	RCROSON	1	
5	GCROSON	1	
6	BCROSON	1	
7	TOPON	0	
8	RTOPON	1	
9	GTOPON	1	
10	BTOPON	1	
11	BTOMON	0	
12	RBTOMON	1	
13	GBTOMON	1	
14	BBTOMON	1	
15	LEFTON	0	
16	RLEFTON	1	
17	GLEFTON	1	
18	BLEFTON	1	
19	RIGTON	0	
20	RRIGTON	1	
21	GRIGTON	1	
22	BRIGTON	1	
23	CRPOSHH	43	
24	CRPOSHL	5	
25	CRPOSVH	1	
26	CRPOSVL	137	
27	FRLEFTH	2	
28	FRLEFTL	3	
29	FRRIGTH	5	
30	FRRIGTL	71	
31	FRTOPH	1	
32	FRTOPL	7	
33	FRBOTMH	2	
34	FRBOTML	251	
35	RCURLVL	31	
36	GCURLVLH	3	
37	GCURLVLL	7	
38	BCURLVL	31	
39	RSMPSW	0	
40	RSMPHPH	0	
41	RSMPHPL	0	
42	RSMPVPH	0	
43	RSMPVPL	0	
44	RSMPSIZE	0	
45	RSMPRIM	0	
46	RSMPCYCL	0	
47	RSMPRILV	0	
48	RSMPHLVR	0	
49	RSMPHLVG	0	
50	RSMPHLVB	0	
51	RSMPLLVR	0	
52	RSMPLLVG	0	
53	RSMPLLVB	0	

D9671TG1

Functionality		Data	Rremarks
No.	Name		
0	MSB-STPH	0	
1	STAPOSH	216	
2	STAPOSV	16	
3	TGOFF	0	
4	HSTPOL	0	
5	VSTPOL	0	
6	HCKPOL	0	
7	VCKPOL	0	
8	BLKPOL	0	
9	PSTPOL	0	
10	DCKPOL	0	
11	CLRPOL	1	
12	ENBPOL	1	
13	SHSTPOL	1	
14	AUX2POL	0	
15	HCKWIDTH	2	
16	HSTPHASE	9	
17	HSTPOSH	0	
18	HSTPOSL	7	
19	VSTPHASH	0	
20	VSTPHASL	0	
21	VSTPOS	11	
22	PCGPHASE	0	
23	PCGWIDTH	31	
24	PRGPHASE	0	
25	PRGWIDTH	18	
26	TGPOSHH	1	
27	TGPOSHL	4	
28	TGPHASVH	0	
29	TGPHASVL	0	
30	TGPOSV	44	

D9671TG2

Functionality		Data	Rremarks
No.	Name		
0	FRPPHASE	255	
1	ENBPITCH	0	
2	CLRPITCH	0	
3	SHSTPITCH	0	
4	AUX2PITCH	0	
5	ENBPHASE	248	
6	ENBWIDTH	96	
7	PSTPOS	12	
8	PSTPHASE	2	
9	PSTWIDTH	11	
10	DCKPHASE	0	
11	DCKWIDTH	0	
12	CLRPHASE	232	
13	CLRWIDTH	47	
14	BLKPOS	0	
15	BLKWIDTH	0	
16	SHSTPHAS	217	
17	SHSTWIDT	128	
18	AUX2PHA	0	
19	AUX2WIDT	0	

D9671CSC

Functionality		Data	Rremarks
No.	Name		
0	FRPPHASE	255	
1	FRPPHASE	256	
2	FRPPHASE	257	
3	FRPPHASE	258	
4	FRPPHASE	259	
5	FRPPHASE	260	
6	FRPPHASE	261	
7	FRPPHASE	262	
8	FRPPHASE	263	
9	FRPPHASE	264	
10	FRPPHASE	265	
11	FRPPHASE	266	
12	FRPPHASE	267	
0	CSC00H	9	
1	CSC00L	145	
2	CSC01H	38	
3	CSC01L	15	
4	CSC02H	2	
5	CSC02L	65	
6	CSC10H	32	
7	CSC10L	7	
8	CSC11H	9	
9	CSC11L	240	
10	CSC12H	31	
11	CSC12L	5	
12	CSC20H	2	
13	CSC20L	34	
14	CSC21H	42	
15	CSC21L	9	
16	CSC22H	9	
17	CSC22L	29	
18	CSCCOR0H	63	
19	CSCCOR0L	189	
20	CSCCOR1H	0	
21	CSCCOR1L	17	
22	CSCCOR2H	0	
23	CSCCOR2L	22	
24	ASLSW	0	
25	ASLMODE	0	
26	ASLSLPR	0	
27	ASLSLPO	0	
28	ASLARP	0	
29	ASLARB	0	
30	ASLWAP	0	
31	ASLWAB	0	
32	ASLPLVLR	0	
33	ASLBLVLR	0	
34	ASLPLVLG	0	
35	ASLBLVLG	0	
36	ASLPLVLB	0	
37	ASLBLVLB	0	

A7001R

Functionality		Data	Rremarks
No.	Name		
0	RGAINA	204	
1	RGAINB	32	
2	ROFSETA	165	
3	ROFSETB	32	
4	RCALLVL	12	
5	SHPOS	2	
6	RVCOM	43	
7	RSIDLVL	8	
8	S-RGAINA	204	
9	S-RGAINB	0	
10	S-ROFSETA	165	
11	S-ROFSETB	0	

A7001G

Functionality		Data	Rremarks
No.	Name		
0	GGAINA	191	
1	GGAINB	32	
2	GOFSETA	144	
3	GOFSETB	32	
4	GCALLVL	12	
5	SHPOS	2	
6	GVCOM	43	
7	GSIDLVL	8	
8	S-GGAINA	191	
9	S-GGAINB	0	
10	S-GOFSETA	144	
11	S-GOFSETB	0	

A7001B

Functionality		Data	Rremarks
No.	Name		
0	BGAINA	191	
1	BGAINB	32	
2	BOFSETA	144	
3	BOFSETB	32	
4	BCALLVL	12	
5	SHPOS	2	
6	BVCOM	40	
7	BSIDLVL	8	
8	S-BGAINA	191	
9	S-BGAINB	0	
10	S-BOFSETA	144	
11	S-BOFSETB	0	

SH SET

Functionality		Data	Rremarks
No.	Name		
0	SH	0	
1	SHIFT SET	*1	

Standards *1

No.	Name	SH = 0	SH = 1	SH = 2	SH = 3	SH = 4	SH = 5	SH = 6
1	SHIFT SET	15	16	17	18	16	16	16

H POS SHI

Functionality		Data	Rremarks
No.	Name		
0	VAR POS CTL	0	
1	SHPOS	*1	

Standards *1

No.	Name	VAR POS CTL = 0	VAR POS CTL = 1	VAR POS CTL = 2	VAR POS CTL = 3
1	SHPOS	8	6	6	4

No.	Name	VAR POS CTL = 4	VAR POS CTL = 5	VAR POS CTL = 6	VAR POS CTL = 7
1	SHPOS	4	2	2	0

No.	Name	VAR POS CTL = 8	VAR POS CTL = 9	VAR POS CTL = 10	VAR POS CTL = 11
1	SHPOS	0	10	10	8

No.	Name	VAR POS CTL = 12	VAR POS CTL = 13	VAR POS CTL = 14	VAR POS CTL = 15
1	SHPOS	8	6	6	4

TEMP

Functionality		Data	Rremarks
No.	Name		
0	SET	59	
1	TIME	10	
2	PON-TIME	0	
3	PON-TEMP	*1	
4	TEMP	0	
5	OFFSET	*2	

Standards *1

No.	Name	PON-TIME=0	PON-TIME=1	PON-TIME=2	PON-TIME=3
3	PON-TEMP	141	141	141	141

No.	Name	PON-TIME=4	PON-TIME=5	PON-TIME=6	PON-TIME=7
3	PON-TEMP	141	140	140	138

No.	Name	PON-TIME=8	PON-TIME=9	PON-TIME=10	PON-TIME=11
3	PON-TEMP	138	136	136	135

No.	Name	PON-TIME=12	PON-TIME=13	PON-TIME=14	PON-TIME=15
3	PON-TEMP	135	134	134	134

No.	Name	PON-TIME=16	PON-TIME=17	PON-TIME=18	PON-TIME=19
3	PON-TEMP	133	133	133	132

No.	Name	PON-TIME=20	PON-TIME=21	PON-TIME=22	PON-TIME=23
3	PON-TEMP	132	131	131	131

No.	Name	PON-TIME=24	PON-TIME=25	PON-TIME=26	PON-TIME=27
3	PON-TEMP	131	130	130	130

No.	Name	PON-TIME=28	PON-TIME=29	PON-TIME=30
3	PON-TEMP	129	128	128

Standards *2

No.	Name	TEMP=0	TEMP=1	TEMP=2	TEMP=3
5	OFFSET	113	113	113	113

No.	Name	TEMP=4	TEMP=5	TEMP=6	TEMP=7
5	OFFSET	113	113	113	113

No.	Name	TEMP=8	TEMP=9	TEMP=10	TEMP=11
5	OFFSET	113	113	113	113

No.	Name	TEMP=12	TEMP=13	TEMP=14	TEMP=15
5	OFFSET	113	113	113	113

No.	Name	TEMP=16	TEMP=17	TEMP=18	TEMP=19
5	OFFSET	113	113	113	113

No.	Name	TEMP=20	TEMP=21	TEMP=22	TEMP=23
5	OFFSET	113	113	113	113

No.	Name	TEMP=24	TEMP=25	TEMP=26	TEMP=27
5	OFFSET	113	113	113	114

No.	Name	TEMP=28	TEMP=29	TEMP=30	TEMP=31
5	OFFSET	115	115	116	117

No.	Name	TEMP=32	TEMP=33	TEMP=34	TEMP=35
5	OFFSET	117	118	119	119

No.	Name	TEMP=36	TEMP=37	TEMP=38	TEMP=39
5	OFFSET	120	121	121	122

No.	Name	TEMP=40	TEMP=41	TEMP=42	TEMP=43
5	OFFSET	123	123	124	125

No.	Name	TEMP=44	TEMP=45	TEMP=46	TEMP=47
5	OFFSET	125	126	127	127

No.	Name	TEMP=48	TEMP=49	TEMP=50	TEMP=51
5	OFFSET	128	129	129	130

No.	Name	TEMP=52	TEMP=53	TEMP=54	TEMP=55
5	OFFSET	131	131	132	133

No.	Name	TEMP=56	TEMP=57	TEMP=58	TEMP=59
5	OFFSET	133	134	135	135

No.	Name	TEMP=60	TEMP=61	TEMP=62	TEMP=63
5	OFFSET	136	137	138	138

No.	Name	TEMP=64	TEMP=65	TEMP=66	TEMP=67
5	OFFSET	139	140	140	141

No.	Name	TEMP=68	TEMP=69	TEMP=70	TEMP=71
5	OFFSET	142	142	143	143

No.	Name	TEMP=72	TEMP=73	TEMP=74	TEMP=75
5	OFFSET	143	143	143	143

No.	Name	TEMP=76	TEMP=77	TEMP=78	TEMP=79
5	OFFSET	143	143	143	143

No.	Name	TEMP=80
5	OFFSET	143

OSD-E

Functionality		Data		Rremarks
No.	Name	NORMAL	WIDE	
0	VPOS	21	21	
1	HPOS	4	4	

OPTION-E

Functionality		Data	Rremarks
No.	Name		
0	LAMP TIME	-	
1	LAMP OFF	1	
2	FAN OFF	0	
3	FAN1 RPM	0	
4	FAN2 RPM	0	
5	FAN3 RPM	0	
6	FAN4 RPM	0	
7	FAN5 RPM	0	
8	FLAG1	0	
9	AGING PT	0	
10	TEMP SHIFT	1	
11	ADJ	0	
12	P CTL SHT1	10	
13	P CTL SHT2	0	
14	P CTL SHT3	0	
15	P CTL ADD	0	
16	LVDS-WAIT	0	
17	GAM-WAIT	1	

FAN-CTL

Functionality		Data	Remarks
No.	Name		
0	TEMP-ERR	70	
1	FAN1-KICK	255	
2	FAN2-KICK	237	
3	FAN3-KICK	255	
4	FAN10-START	30	
5	FAN10-END	35	
6	FAN10-VMAX	214	
7	FAN10-VMIN	73	
8	FAN11-START	30	
9	FAN11-END	35	
10	FAN11-VMAX	214	
11	FAN11-VMIN	73	
12	FAN12-START	30	
13	FAN12-END	35	
14	FAN12-VMAX	186	
15	FAN12-VMIN	73	
16	FAN13-START	30	
17	FAN13-END	35	
18	FAN13-VMAX	186	
19	FAN13-VMIN	73	
20	FAN20-START	30	
21	FAN20-END	35	
22	FAN20-VMAX	113	
23	FAN20-VMIN	16	
24	FAN21-START	30	
25	FAN21-END	35	
26	FAN21-VMAX	129	
27	FAN21-VMIN	16	
28	FAN22-START	30	
29	FAN22-END	35	
30	FAN22-VMAX	113	
31	FAN22-VMIN	16	
32	FAN23-START	30	
33	FAN23-END	35	
34	FAN23-VMAX	113	
35	FAN23-VMIN	16	
36	FAN30-START	30	
37	FAN30-END	35	
38	FAN30-VMAX	241	
39	FAN30-VMIN	129	
40	FAN31-START	30	
41	FAN31-END	35	
42	FAN31-VMAX	255	
43	FAN31-VMIN	129	
44	FAN32-START	30	
45	FAN32-END	35	
46	FAN32-VMAX	186	
47	FAN32-VMIN	129	
48	FAN33-START	30	
49	FAN33-END	35	
50	FAN33-VMAX	186	
51	FAN33-VMIN	129	

GB RGB

Functionality		Data	Remarks
No.	Name		
0	KURG	1	
1	KUGG	1	
2	KUBG	1	
3	KURB	1	
4	KUGB	1	
5	KUBB	1	

MEMO

SECTION 4
DIAGRAMS

4-1. BLOCK DIAGRAM (1)

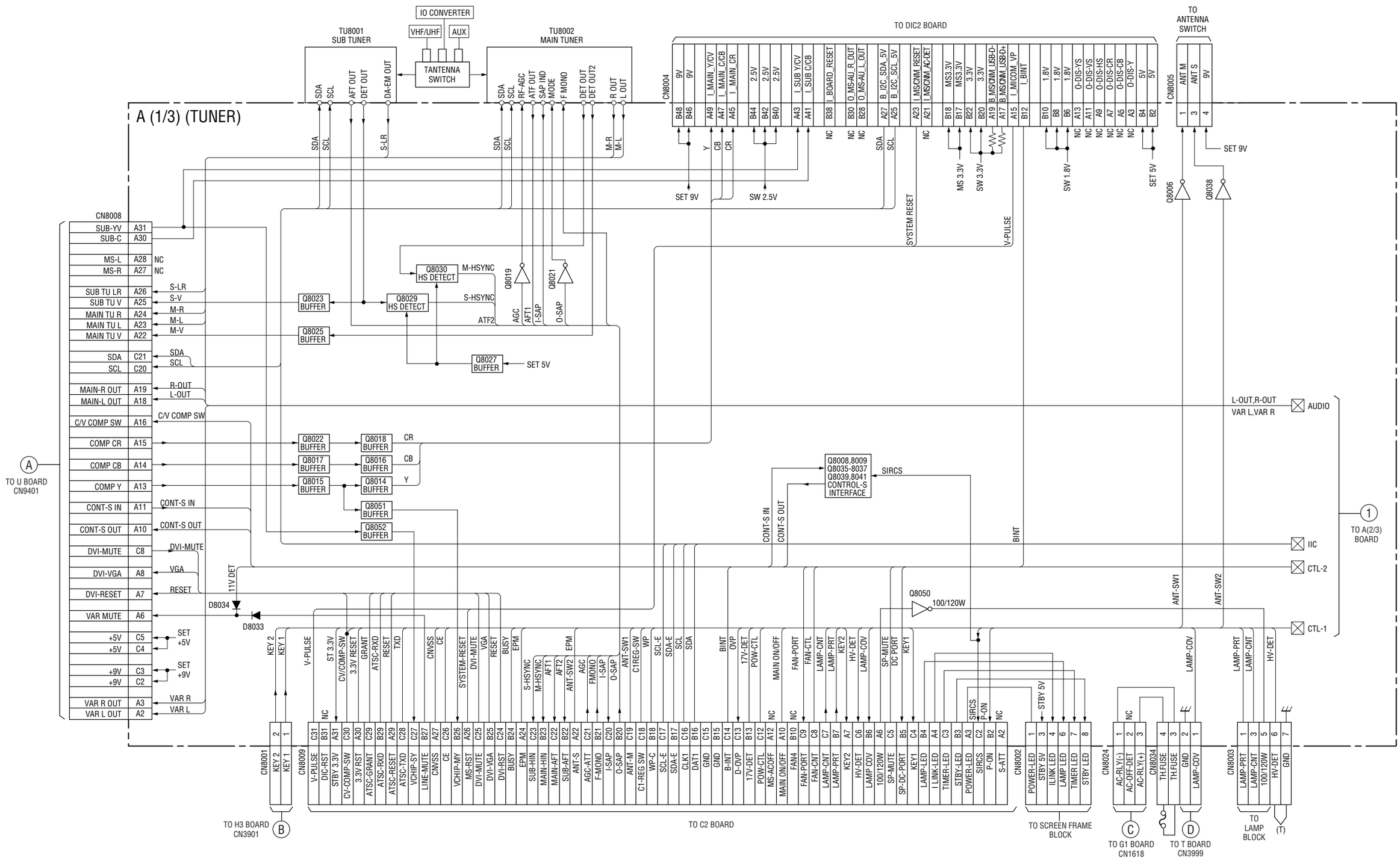

BLOCK DIAGRAM (2)

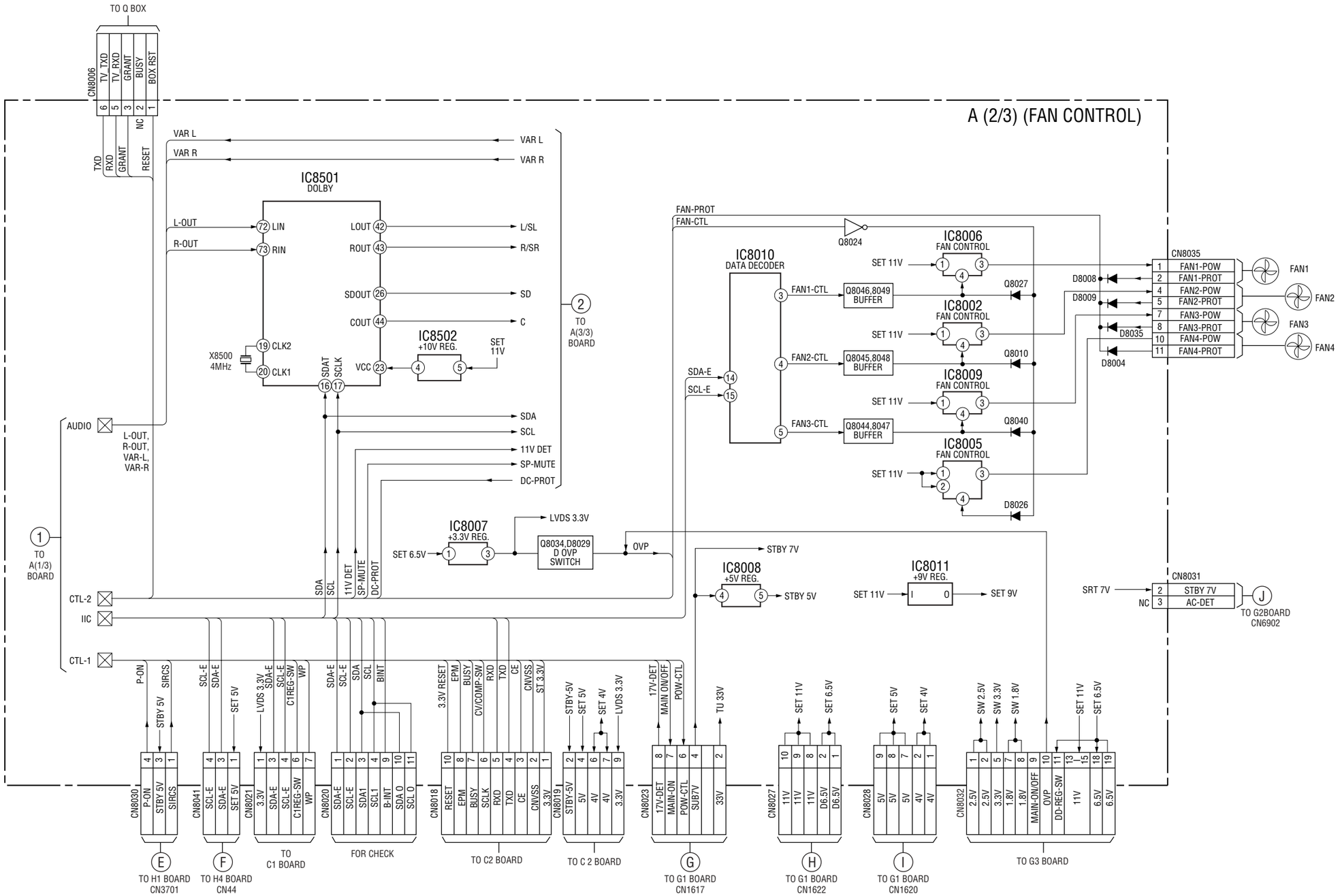

BLOCK DIAGRAM (3)

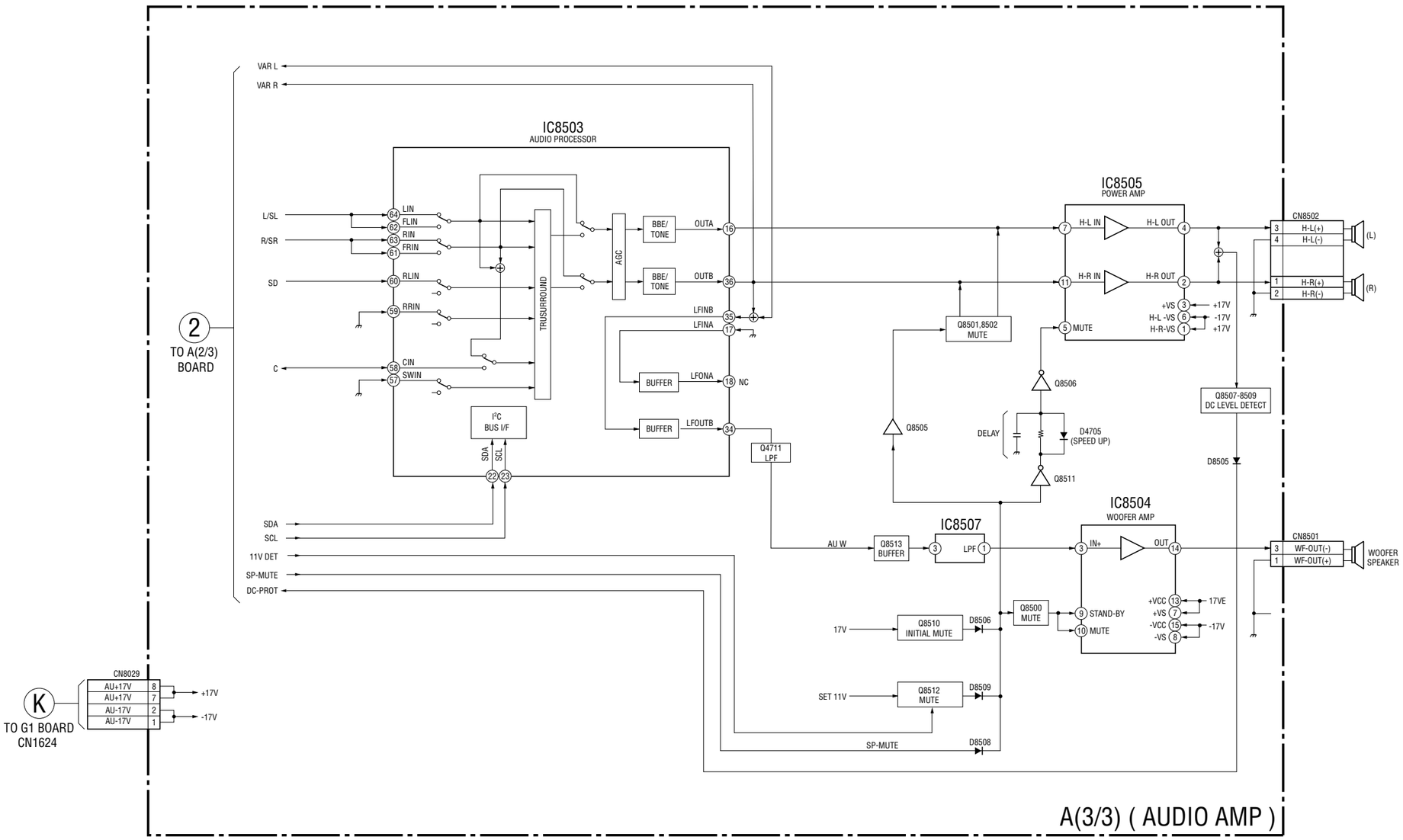

BLOCK DIAGRAM (4)

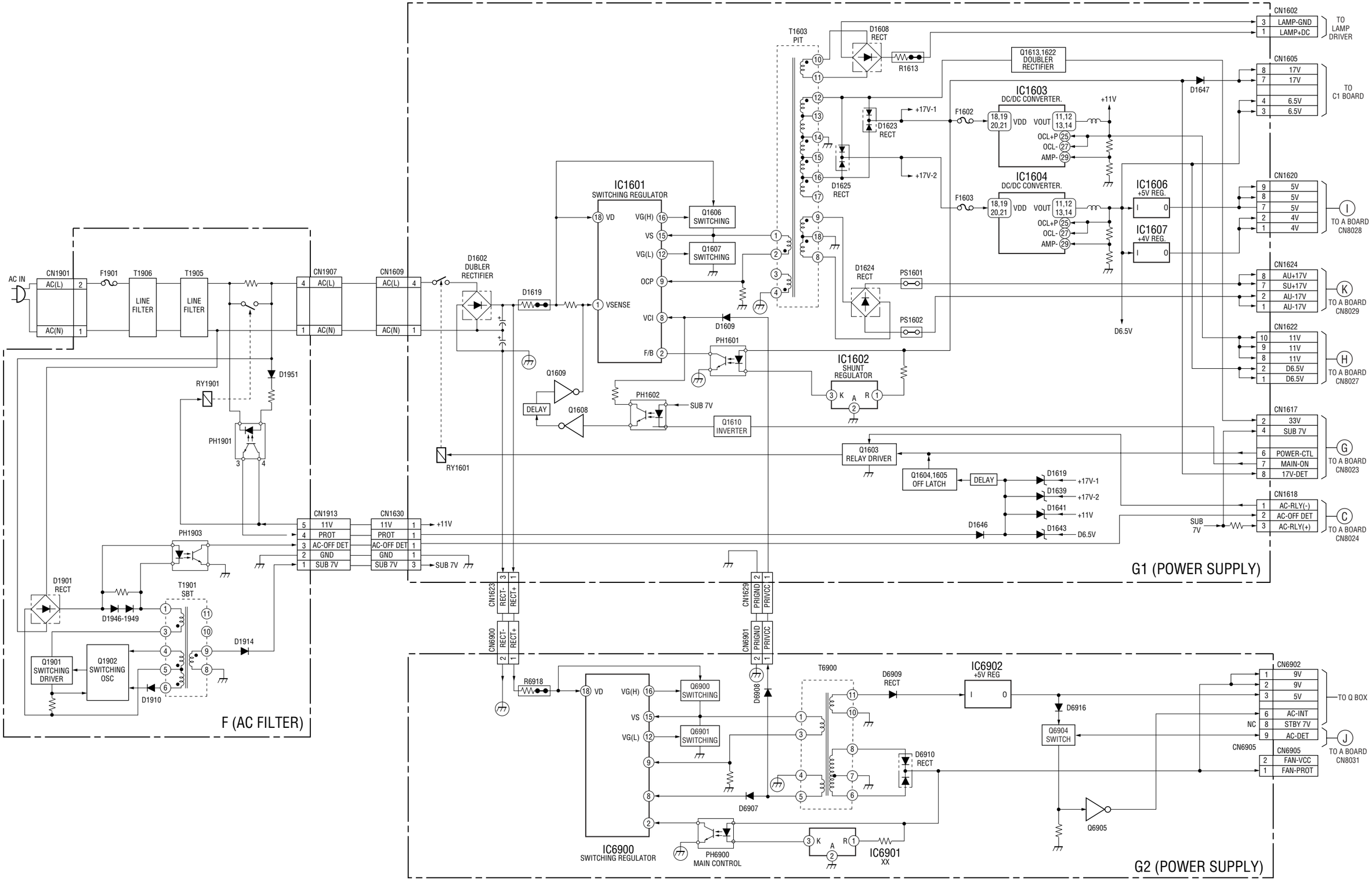

BLOCK DIAGRAM (5)

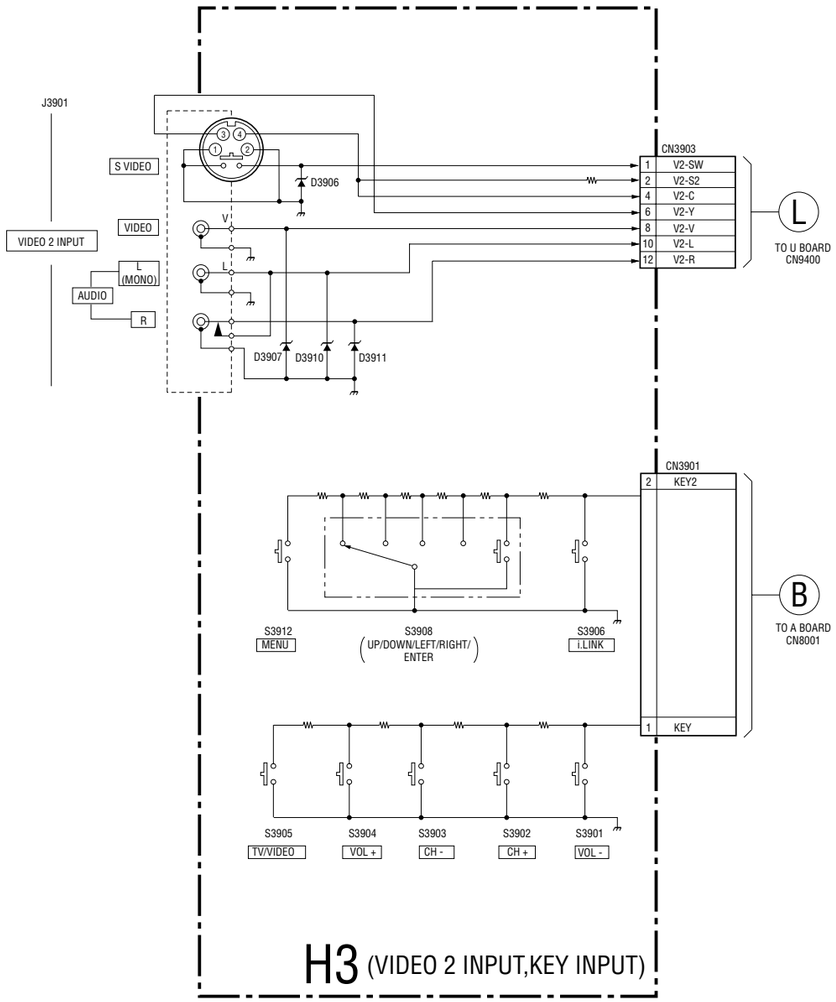

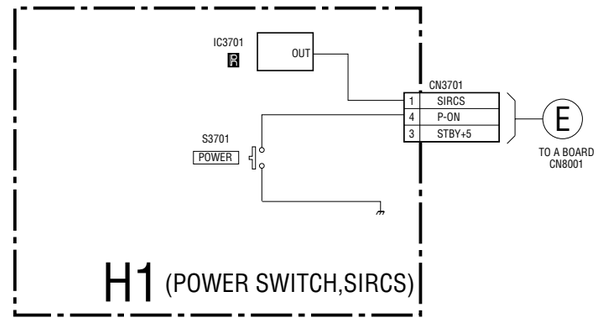

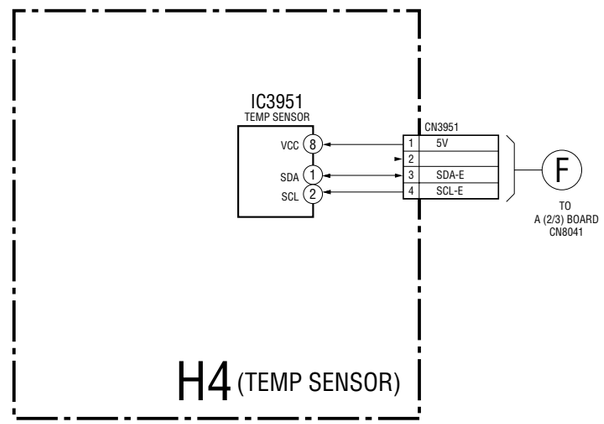

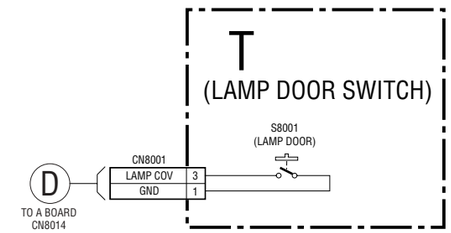

BLOCK DIAGRAM (6)

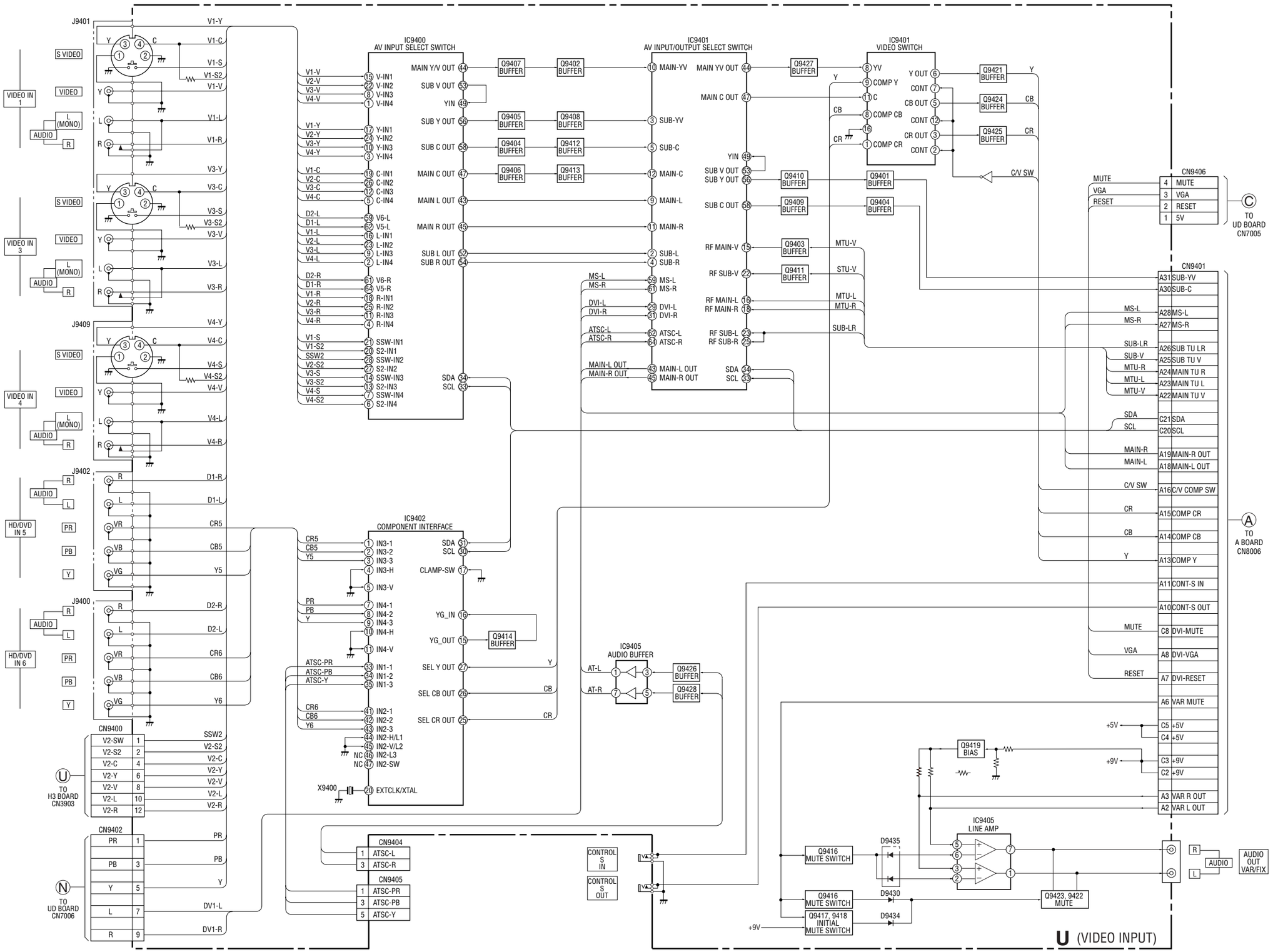

BLOCK DIAGRAM (7)

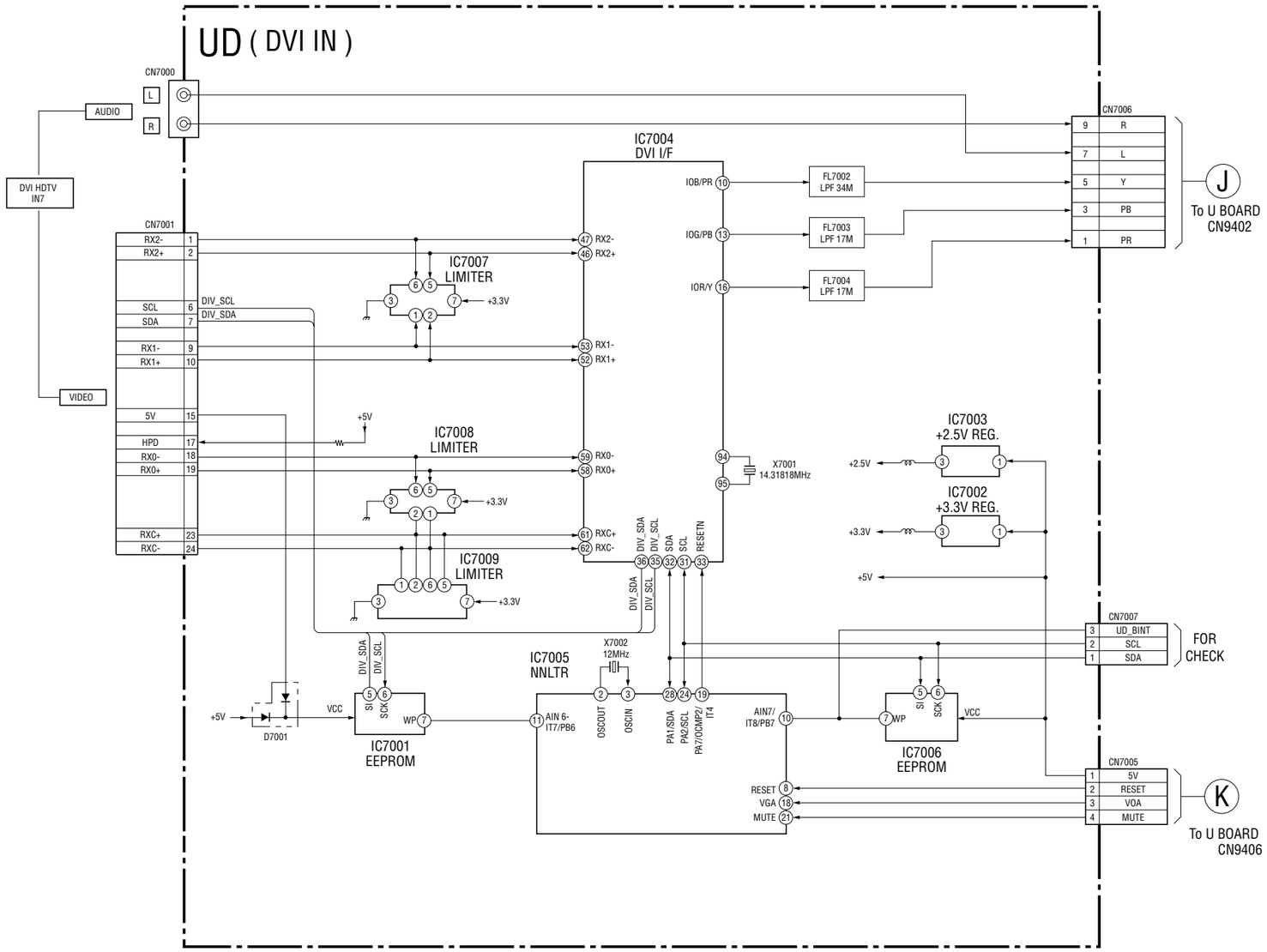

4-2. FRAME SCHEMATIC DIAGRAM

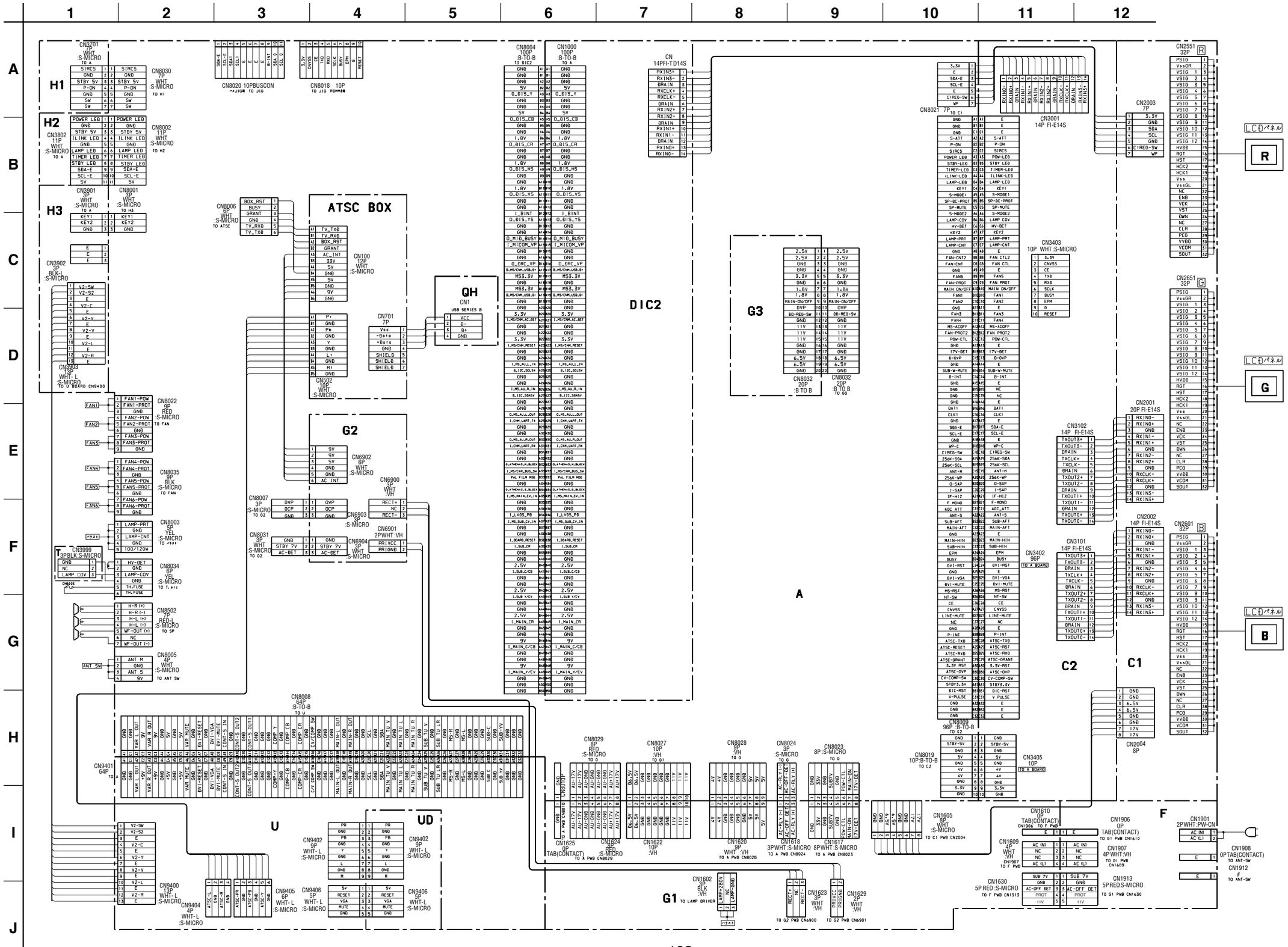

4-3. CIRCUIT BOARDS LOCATION

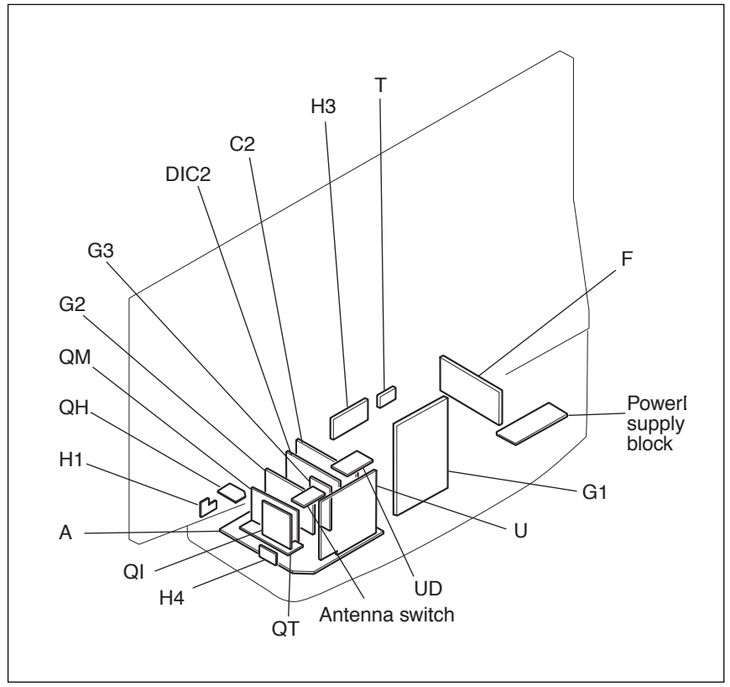

4-4. SCHEMATIC DIAGRAMS

Note:

- The parts marked "#" on schematic diagrams are not mounted.
- All capacitors are in μF unless otherwise noted. (pF: μμF) Capacitors without voltage indication are all 50 V.
- Indication of resistance, which does not have one for rating electrical power, is as follows.

  Pitch: 5 mm
  Rating electrical power 1/4 W (CHIP : 1/10 W)

- All resistors are in ohms.
- : nonflammable resistor.
- : fusible resistor.
- : internal component.
- : panel designation, and adjustment for repair.
- All variable and adjustable resistors have characteristic curve B, unless otherwise noted.
- : earth-ground.
- : earth-chassis.
- All voltages are in V.
- Readings are taken with a 10 MΩ digital multimeter.
- Readings are taken with a color-bar signal input.
- Voltage variations may be noted due to normal production tolerances.
- ✻ : Can not be measured.
- Circled numbers are waveform references.
- : B + bus.
- : B – bus.
- : Signal path.

- Divided schematic diagram

  Schematic diagrams of A, BB, BC, M and U boards are divided into several pieces. Information to where the line is to be connected is printed at the end of each line.
  For example, [**TO A1/3,A2/3_1**] means the line is connected to Ref. No. 1 of A (1/3) and A (2/3) schematic diagrams.

TO A1/3,A2/3_1□
→ Ref. No.
→ Name of divided schematic diagram

Reference information

RESISTOR	: RN	METAL FILM
	: RC	SOLID
	: FPRD	NONFLAMMABLE CARBON
	: FUSE	NONFLAMMABLE FUSIBLE
	: RW	NONFLAMMABLE WIREWOUND
	: RS	NONFLAMMABLE METAL OXIDE
	: RB	NONFLAMMABLE CEMENT
COIL	: LF-8L	MICRO INDUCTOR
CAPACITOR	: TA	TANTALUM
	: PS	STYROL
	: PP	POLYPROPYLENE
	: PT	MYLAR
	: MPS	METALIZED POLYESTER
	: MPP	METALIZED POLYPROPYLENE
	: ALB	BIPOLAR
	: ALT	HIGH TEMPERATURE
	: ALR	HIGH RIPPLE

Note: The components identified by shading and mark ⚠ are critical for safety. Replace only with part number specified.

Terminal name of semiconductors in silk screenl printed circuit (✻)

	Device	Printed symbol	Terminal name	Circuit
①	Transistor		Collector / Base Emitter	
②	Transistor		Collector / Base Emitter	
③	Diode		Cathode / Anode	
④	Diode		Cathode / Anode (NC)	
⑤	Diode		Cathode / Anode (NC)	
⑥	Diode		Common / Anode Cathode	
⑦	Diode		Common / Anode Cathode	
⑧	Diode		Common / Anode Anode	
⑨	Diode		Common / Anode Anode	
⑩	Diode		Common / Cathode Cathode	
⑪	Diode		Common / Cathode Cathode	
⑫	Diode		Anode Cathode / Anode Anode / Cathode Anode	
⑬	Transistor□ (FET)		Drain Source / Gate	
⑭	Transistor□ (FET)		Drain Source / Gate	
⑮	Transistor□ (FET)		□ Source / □ Drain / □ Gate	
⑯	Transistor		□ Emitter / □ Collector / □ Base	
⑰	Transistor		C2 B1 E1 / E2 B2 C1	
⑱	Transistor		C1 B2 E2 / E1 B1 C2	
⑲	Transistor		C1 B2 E2 / E1 B1 C2	
⑳	Transistor		C1 B2 E2 / E1 B1 C2	
㉑	Transistor		E2 B1 E1 / C2 C1(B2)	
㉒	Transistor		(B2)□ B1 E1 E2 / C1 C2	
㉓	Transistor		(B2)□ E2 E1 B1 / C2 C1	
—	Discrete semiconductot			

(Chip semiconductors that are not actually used are included.)

Ver.1.5

(1) Schematic Diagram of A (1/5) Board

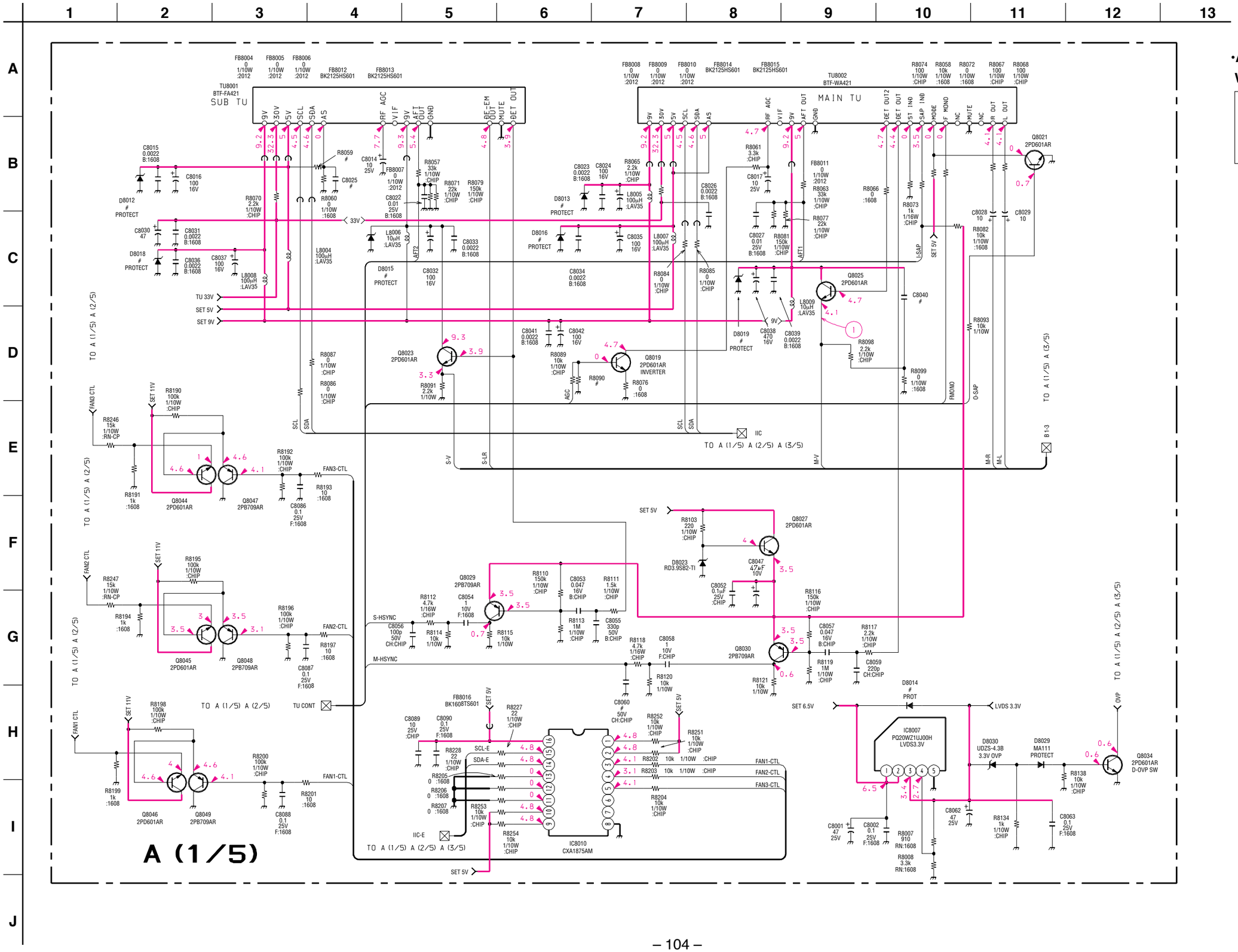

•A (1/5) BOARD WAVEFORMS

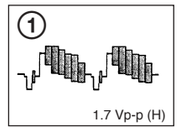

(2) Schematic Diagram of A (2/5) Board

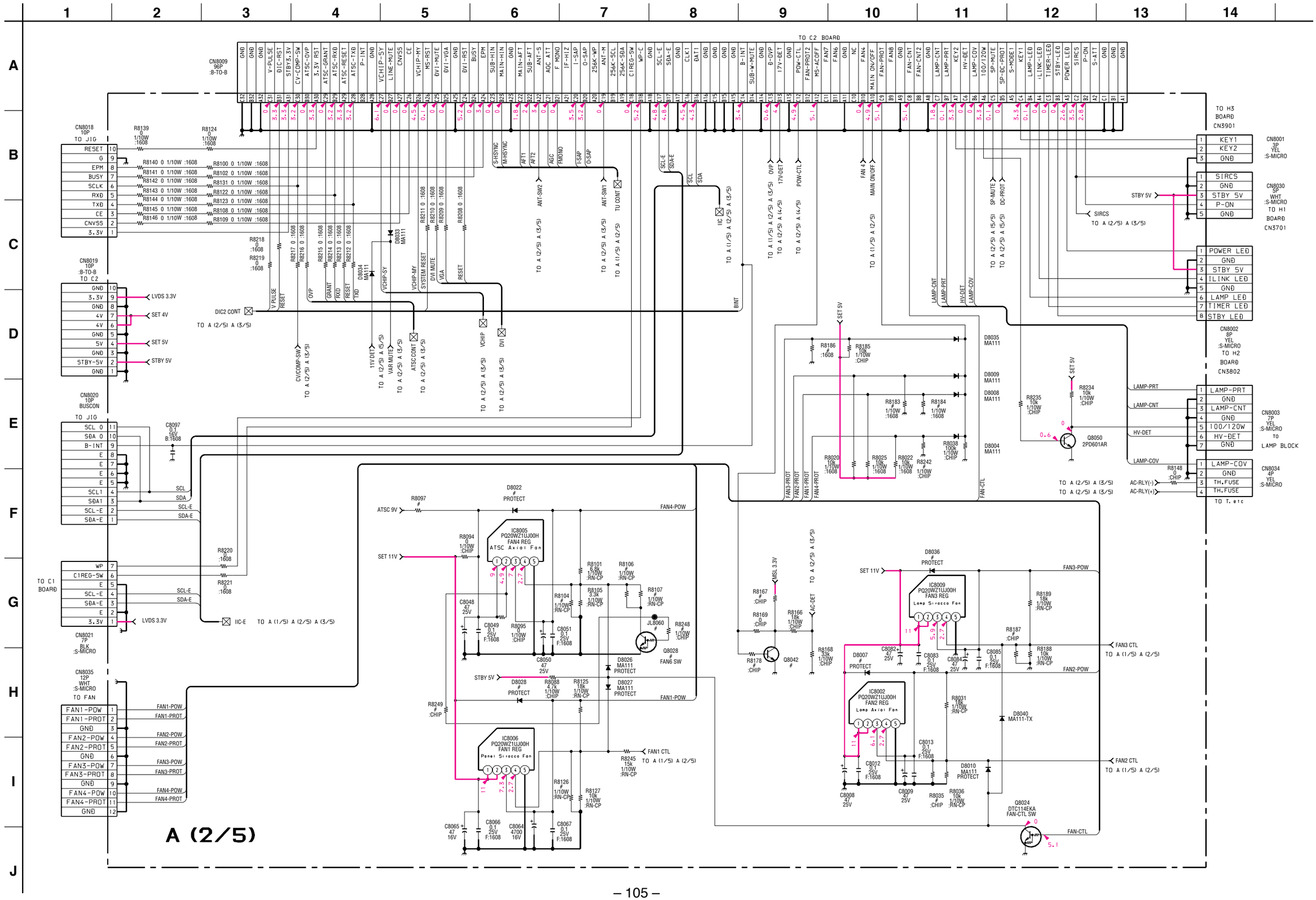

(3) Schematic Diagram of A (3/5) Board

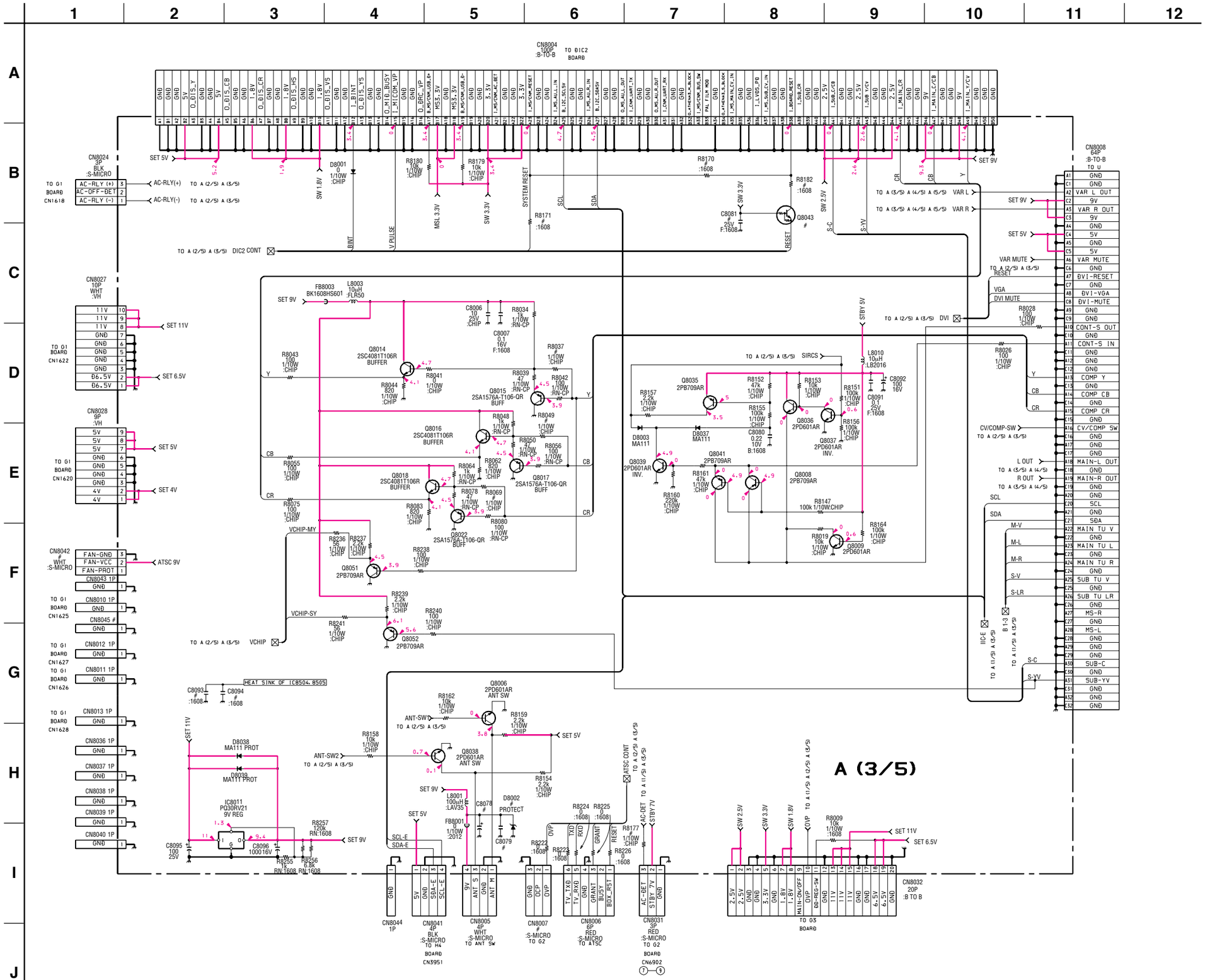

(4) Schematic Diagram of A (4/5) Board

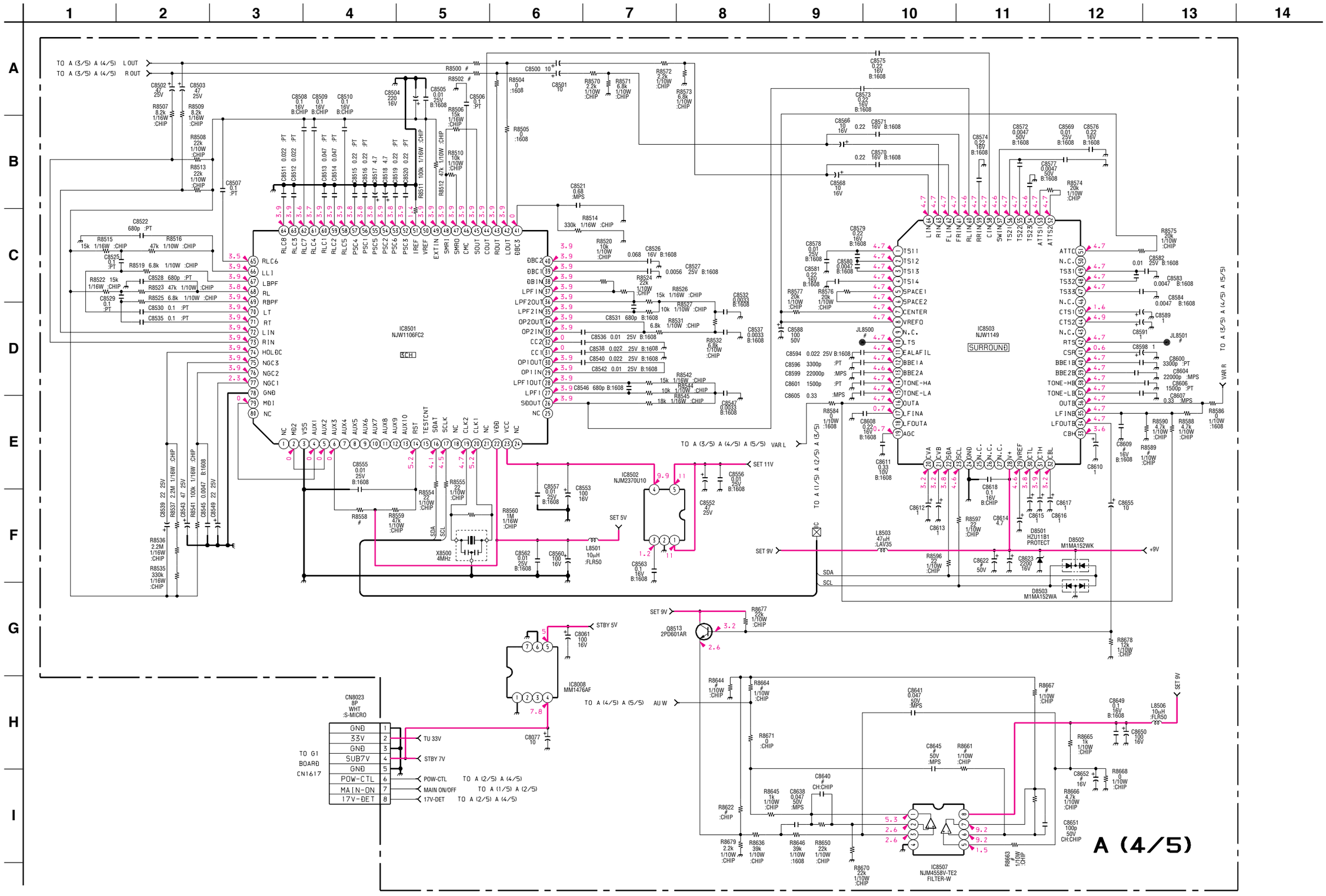

(5) Schematic Diagram of A (5/5) Board

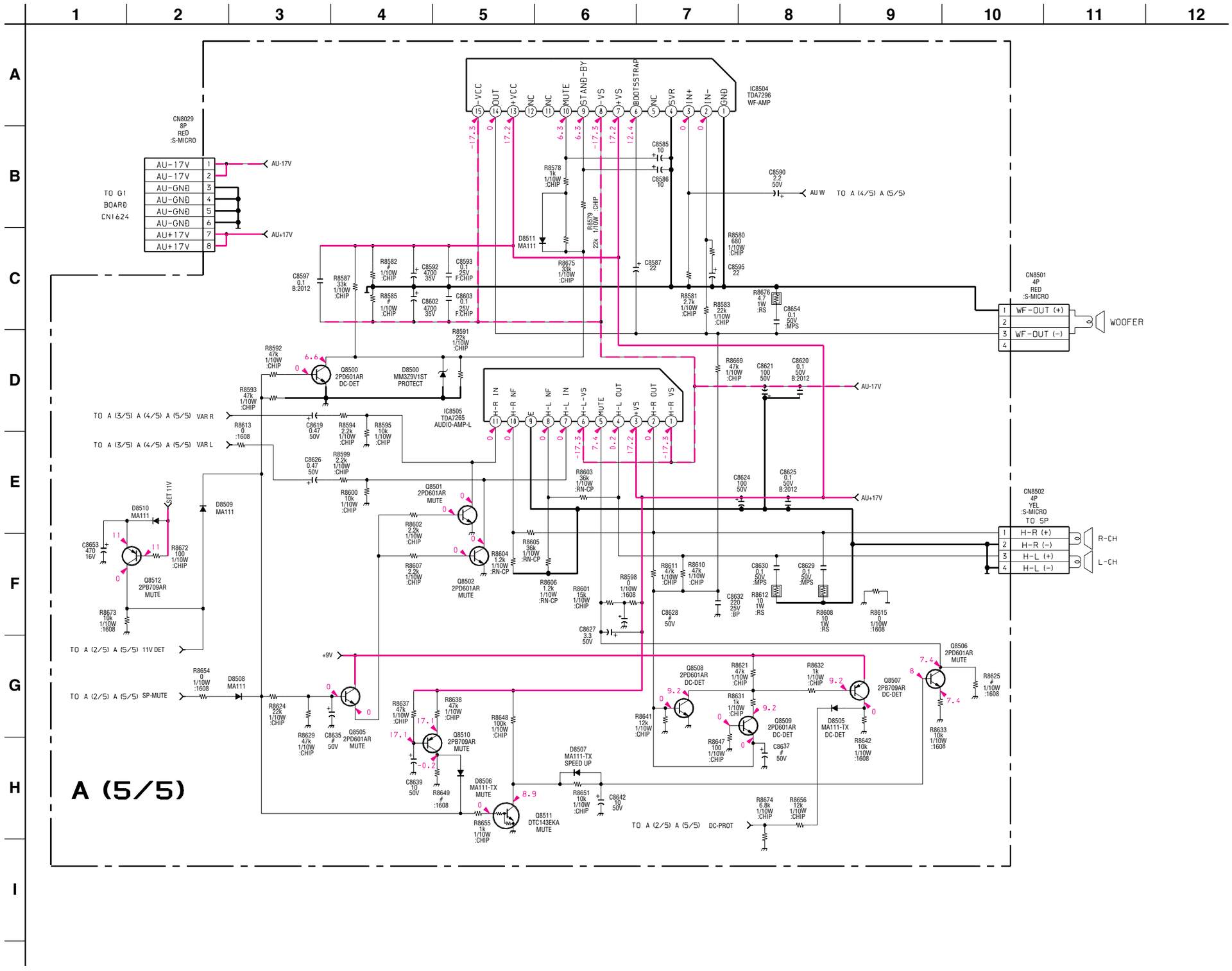

(6) Schematic Diagram of F Board

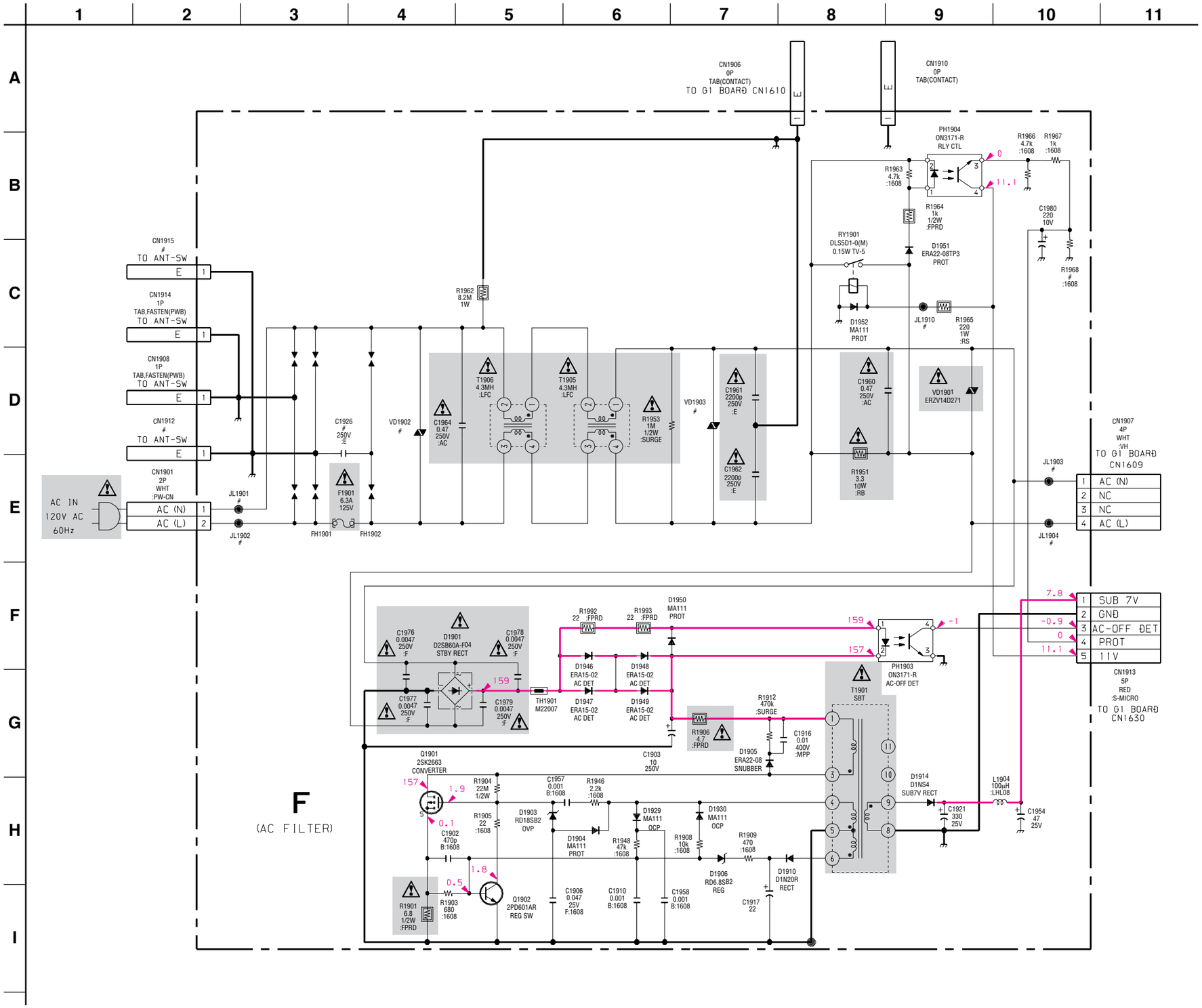

(7) Schematic Diagram of G1 Board

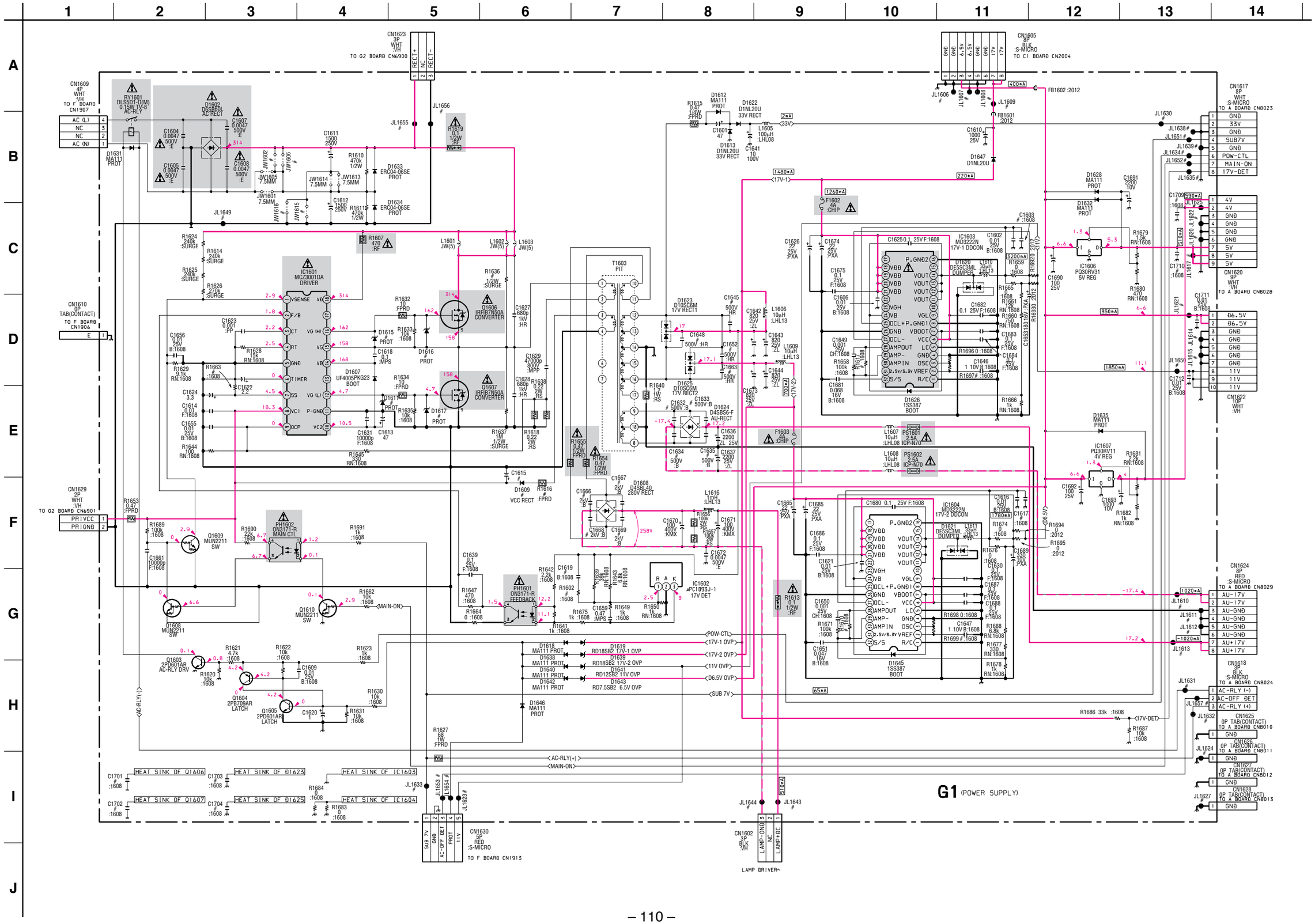

(8) Schematic Diagram of G2 Board

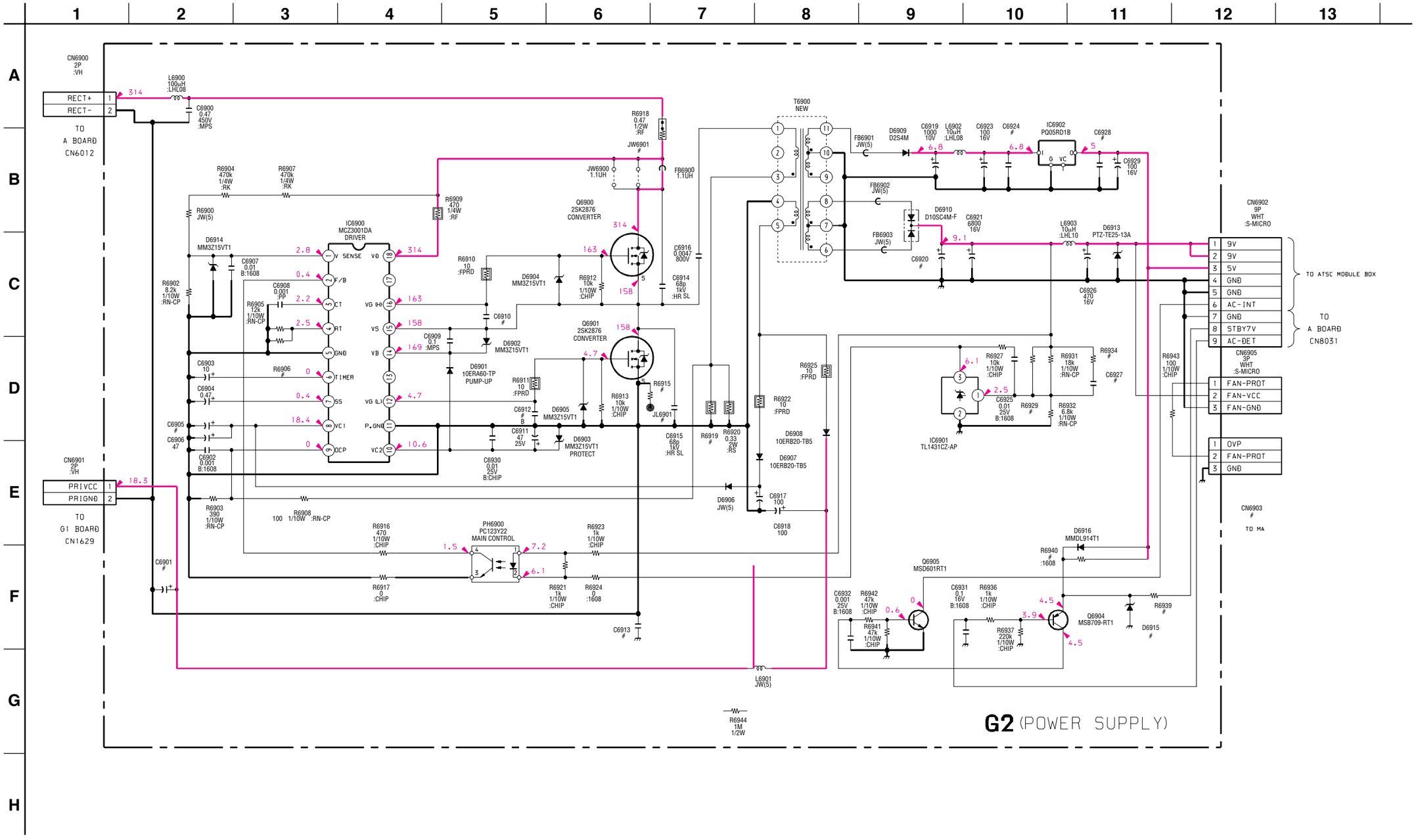

(9) Schematic Diagram of H1, H3, H4, T Board

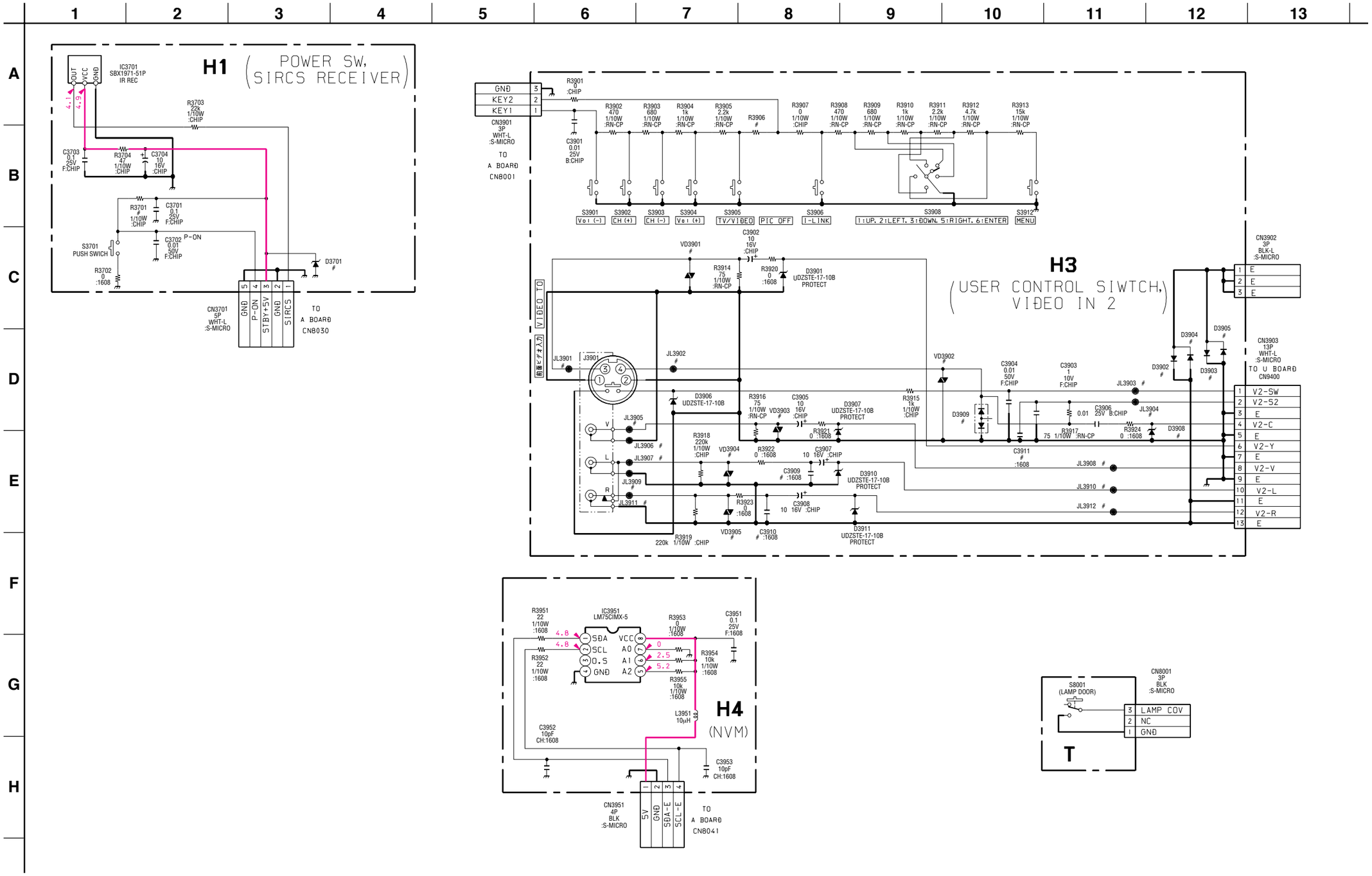

(10) Schematic Diagram of QH Board

Due to the complexity of this board, performing component level fi eld repairs is not recommended. If it is determined that this board has malfunctioned, the Complete Q Box (A-1606-037-B) must be replaced.

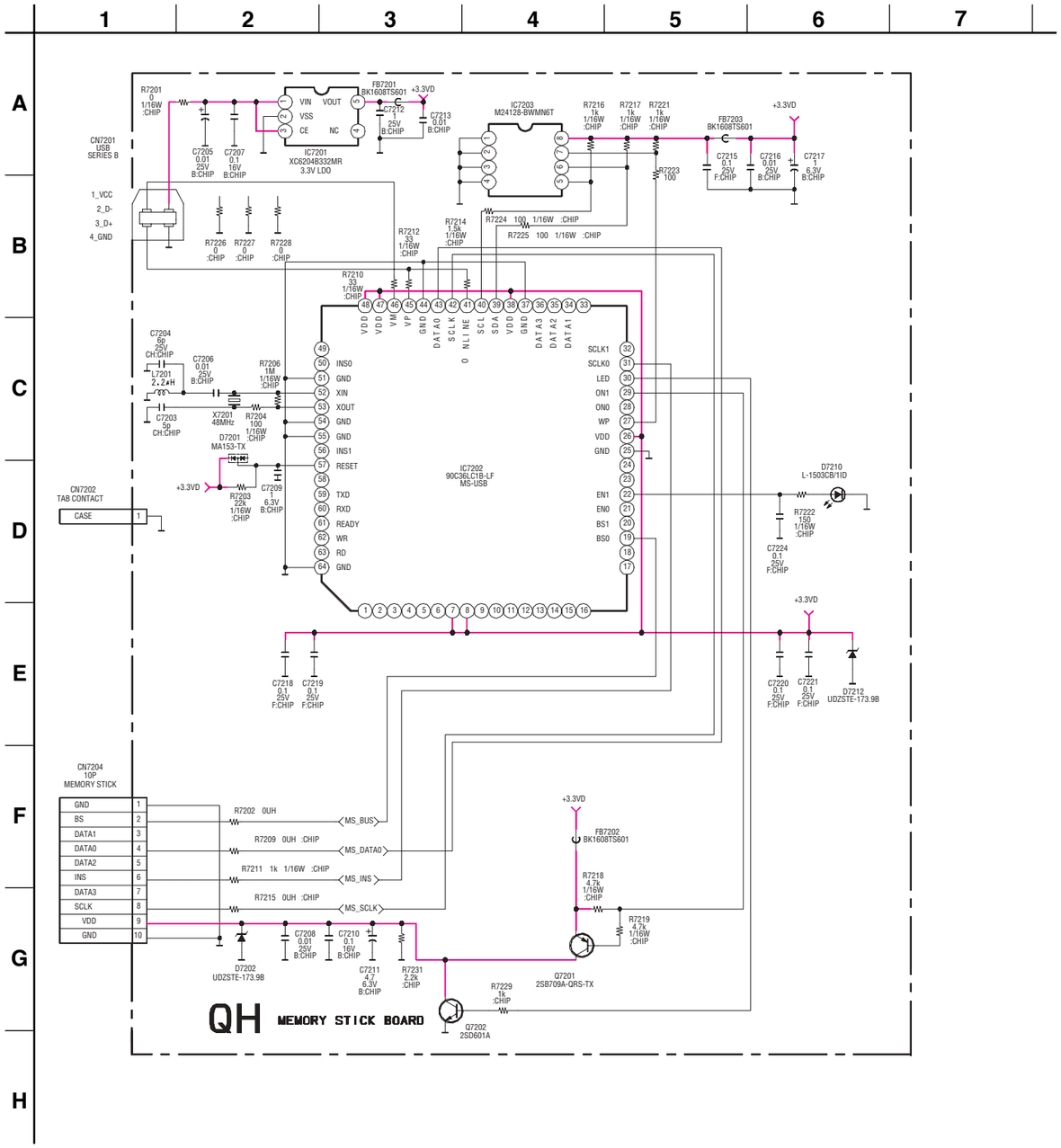

(11) Schematic Diagram of QI (1/3) Board

Due to the complexity of this board, performing component level fi eld repairs is not recommended. If it is determined that this board has malfunctioned, the Complete Q Box (A-1606-037-B) must be replaced.

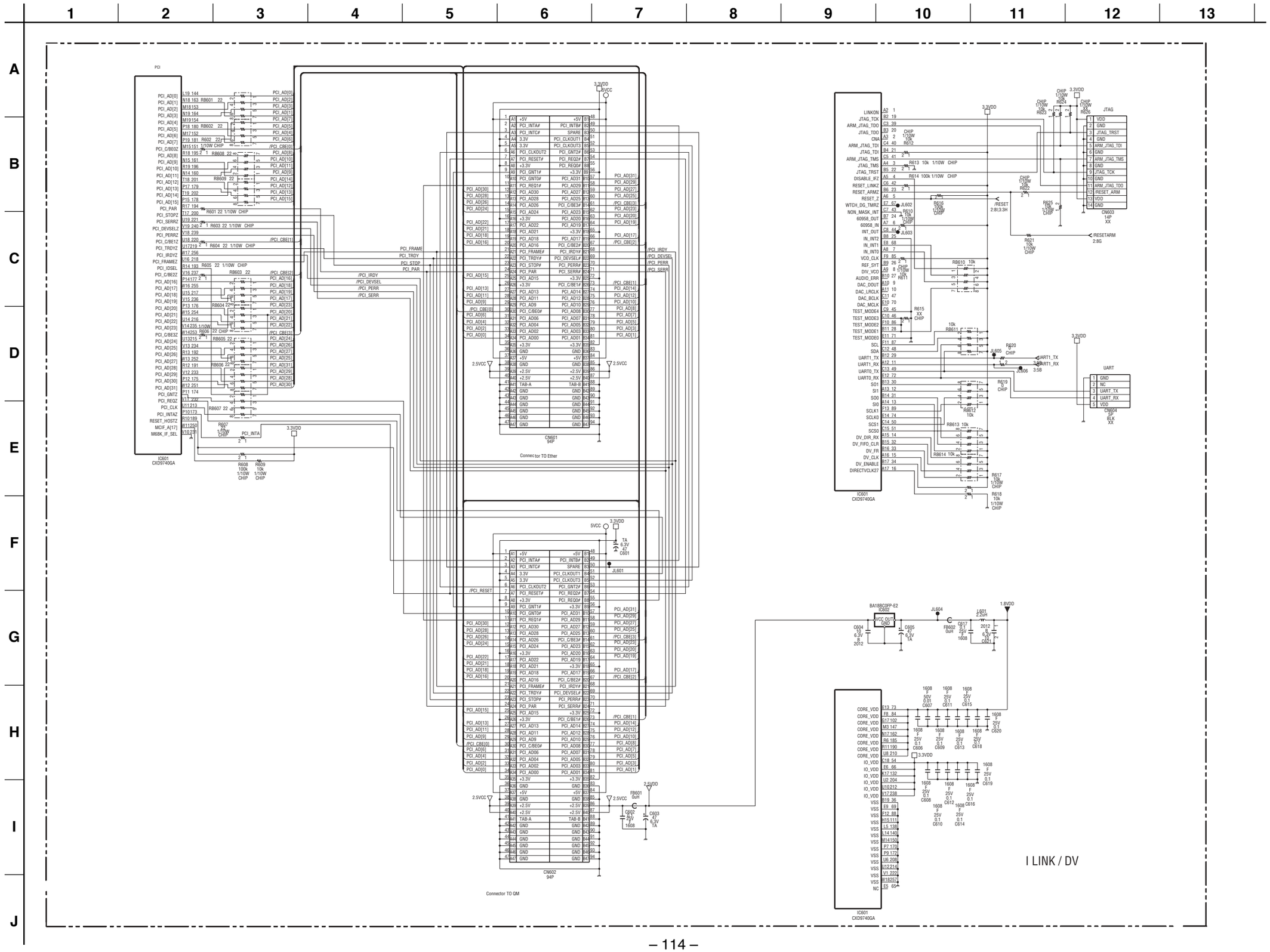

(12) Schematic Diagram of QI (2/3) Board

Due to the complexity of this board, performing component level fi eld repairs is not recommended. If it is determined that this board has malfunctioned, the Complete Q Box (A-1606-037-B) must be replaced.

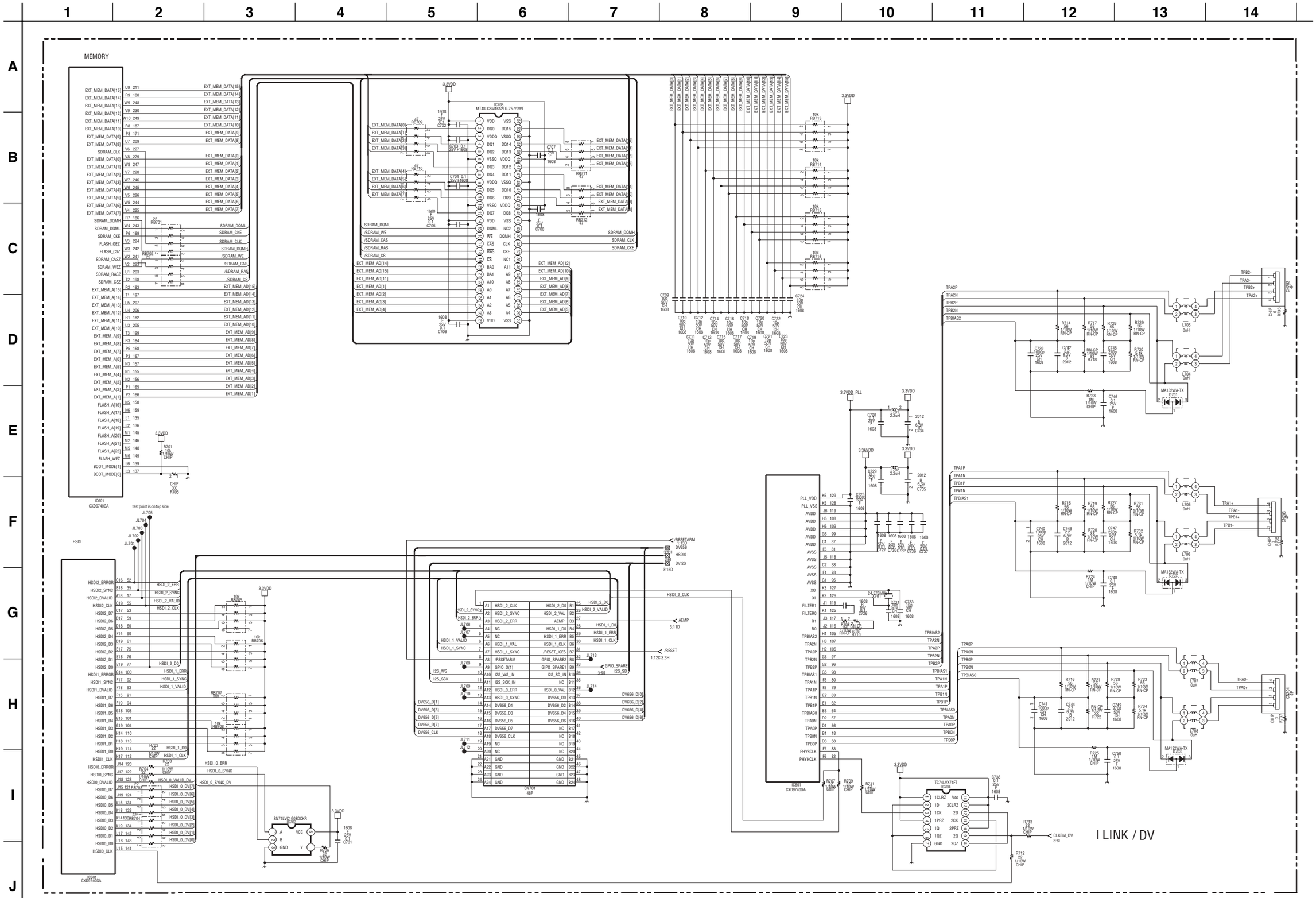

(13) Schematic Diagram of QI (3/3) Board

Due to the complexity of this board, performing component level fi eld repairs is not recommended. If it is determined that this board has malfunctioned, the Complete Q Box (A-1606-037-B) must be replaced.

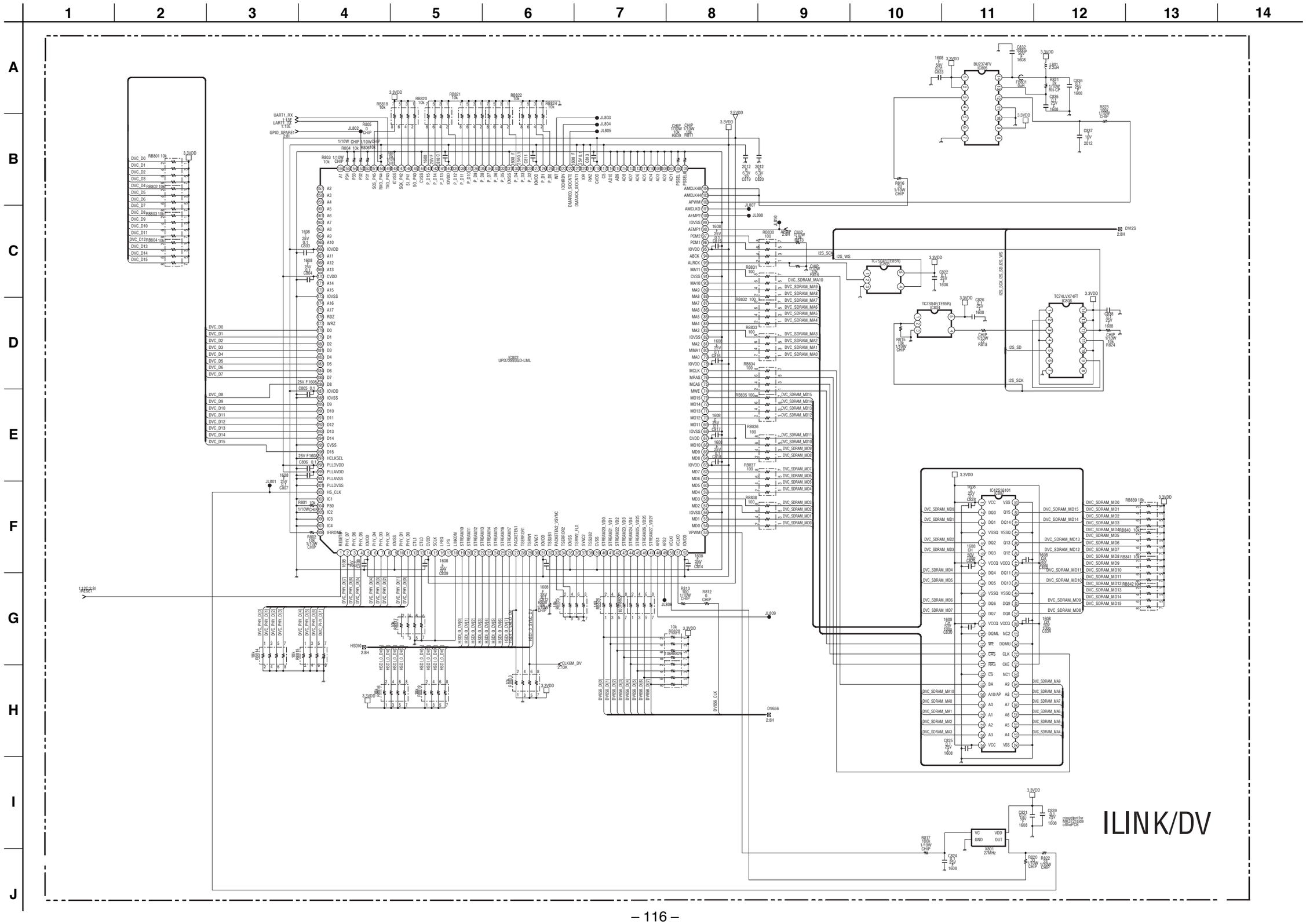

Due to the complexity of this board, performing component level fi eld repairs is not recommended. If it is determined that this board has malfunctioned, the Complete Q Box (A-1606-037-B) must be replaced.

(14) Schematic Diagram of QM (1/5) Board

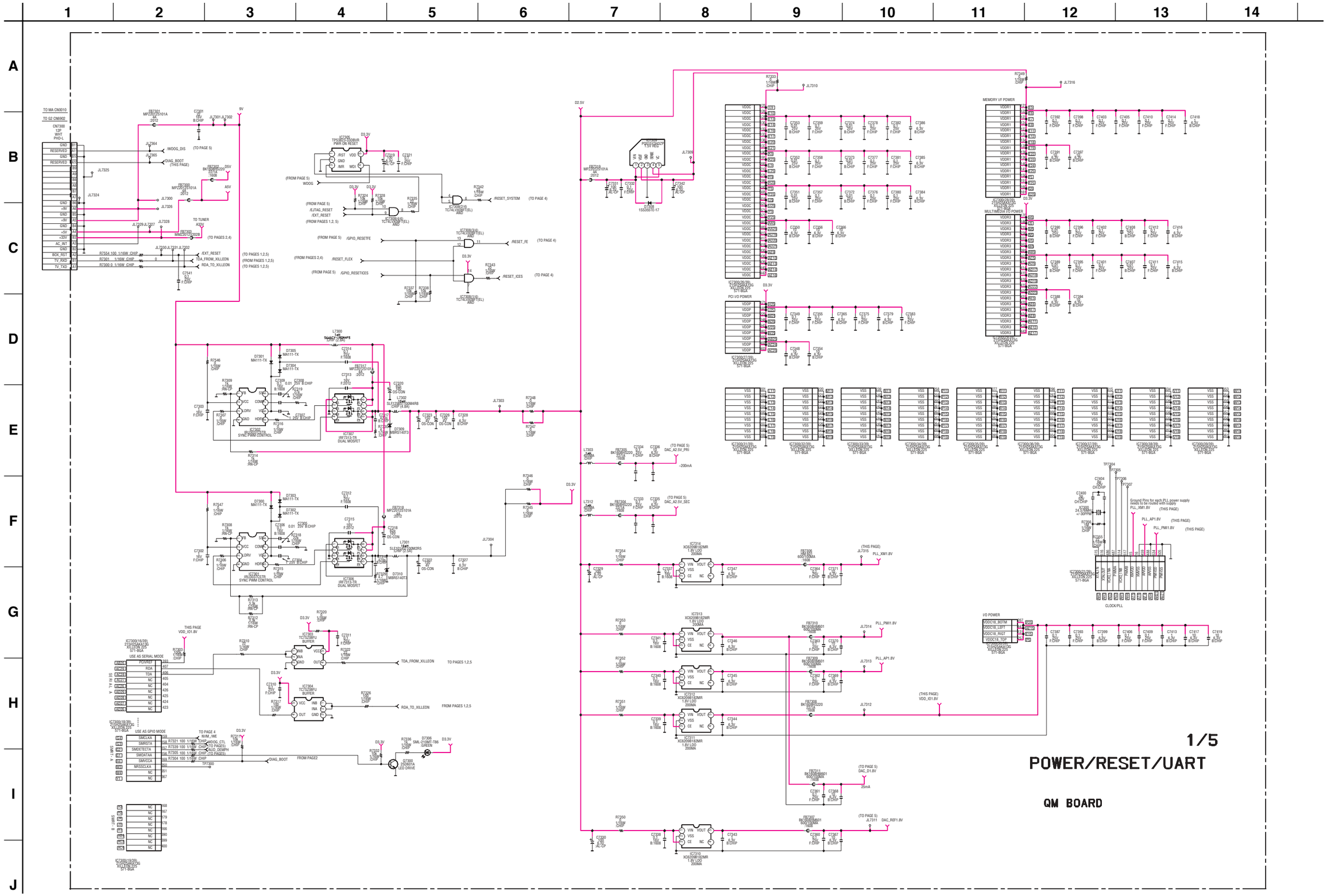

(15) Schematic Diagram of QM (2/5) Board

Due to the complexity of this board, performing component level fi eld repairs is not recommended. If it is determined that this board has malfunctioned, the Complete Q Box (A-1606-037-B) must be replaced.

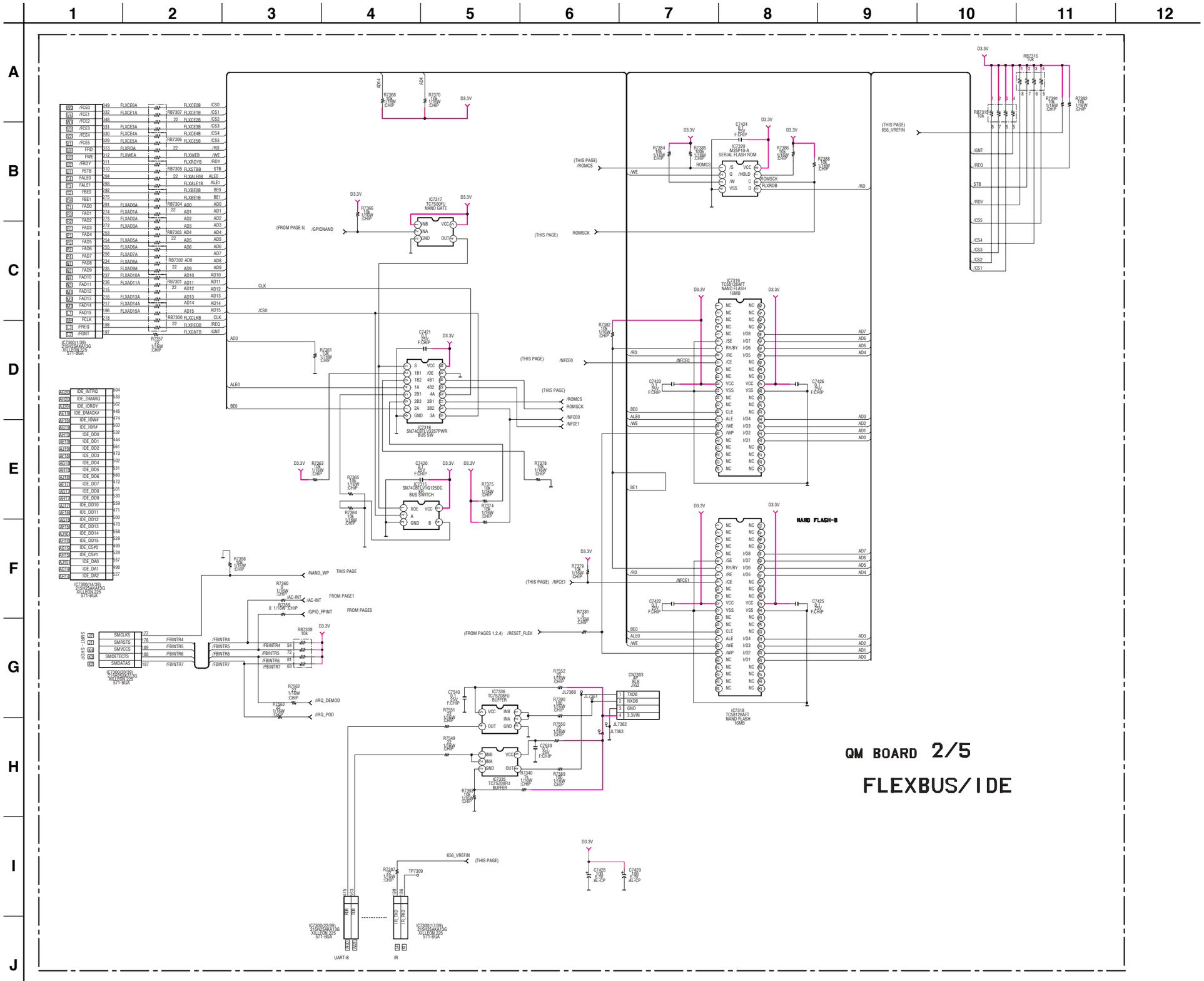

(16) Schematic Diagram of QM (3/5) Board

Due to the complexity of this board, performing component level fi eld repairs is not recommended. If it is determined that this board has malfunctioned, the Complete Q Box (A-1606-037-B) must be replaced.

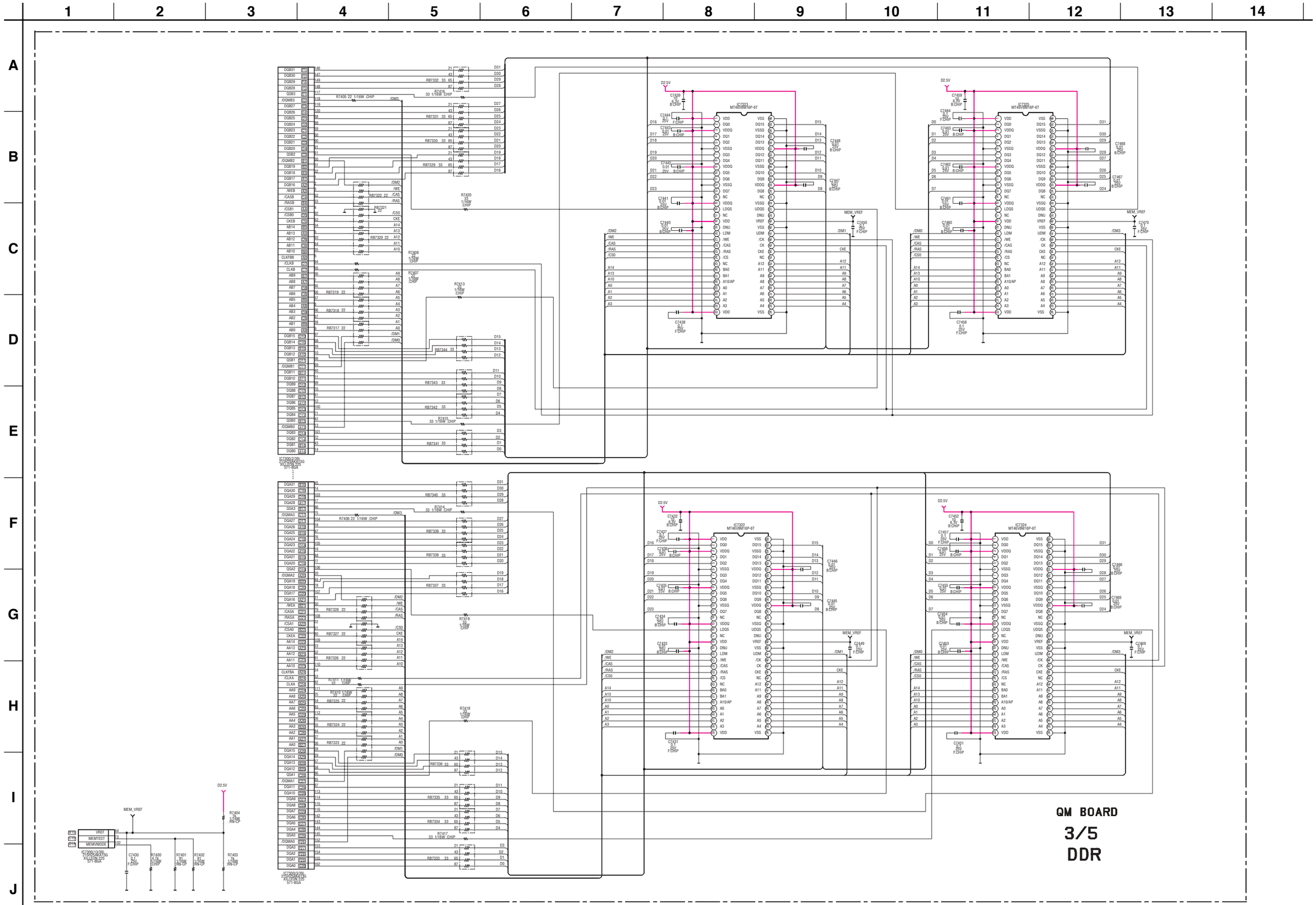

(17) Schematic Diagram of QM (4/5) Board

Due to the complexity of this board, performing component level fi eld repairs is not recommended. If it is determined that this board has malfunctioned, the Complete Q Box (A-1606-037-B) must be replaced.

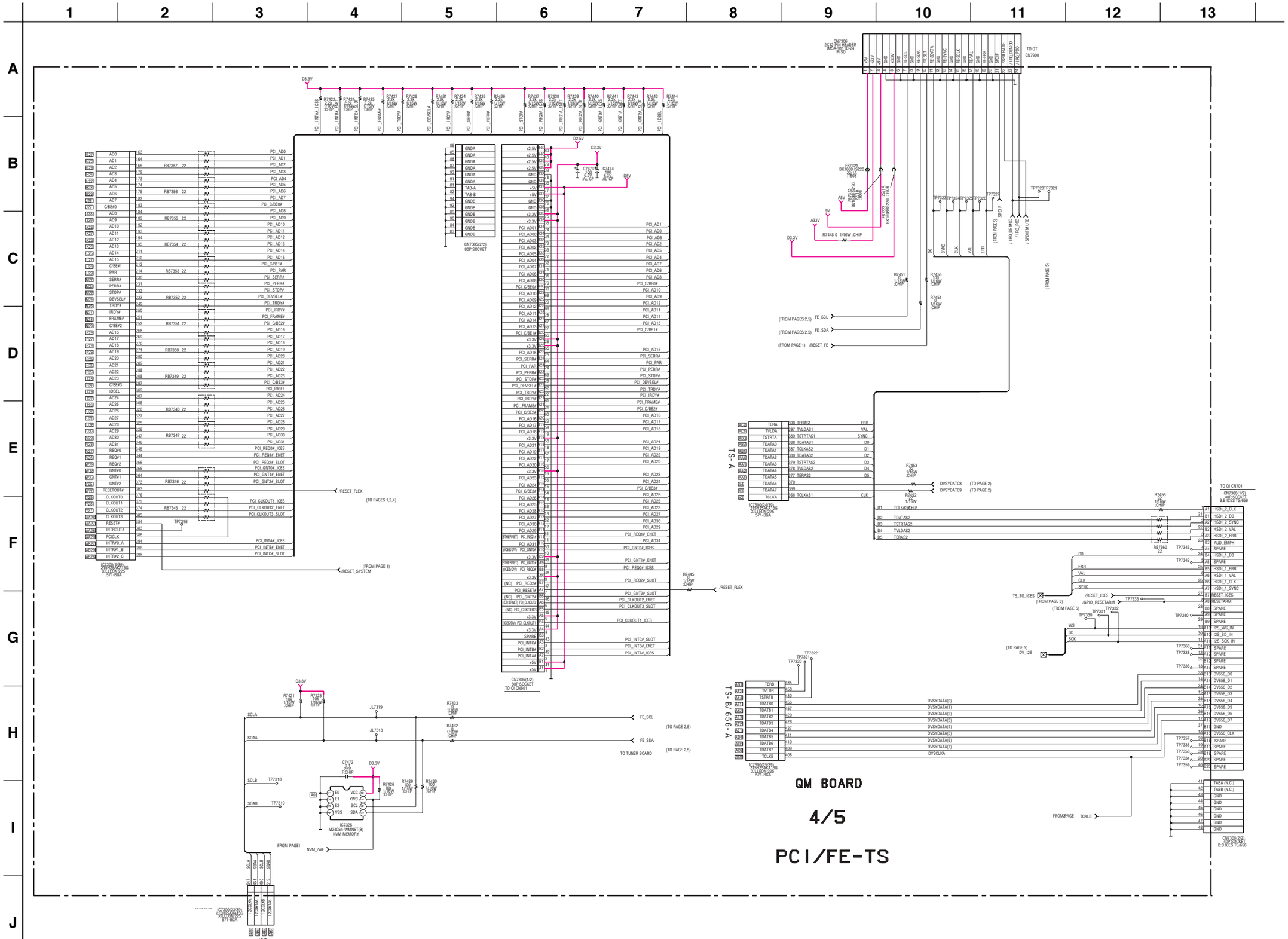

(18) Schematic Diagram of QM (5/5) Board

Due to the complexity of this board, performing component level fi eld repairs is not recommended. If it is determined that this board has malfunctioned, the Complete Q Box (A-1606-037-B) must be replaced.

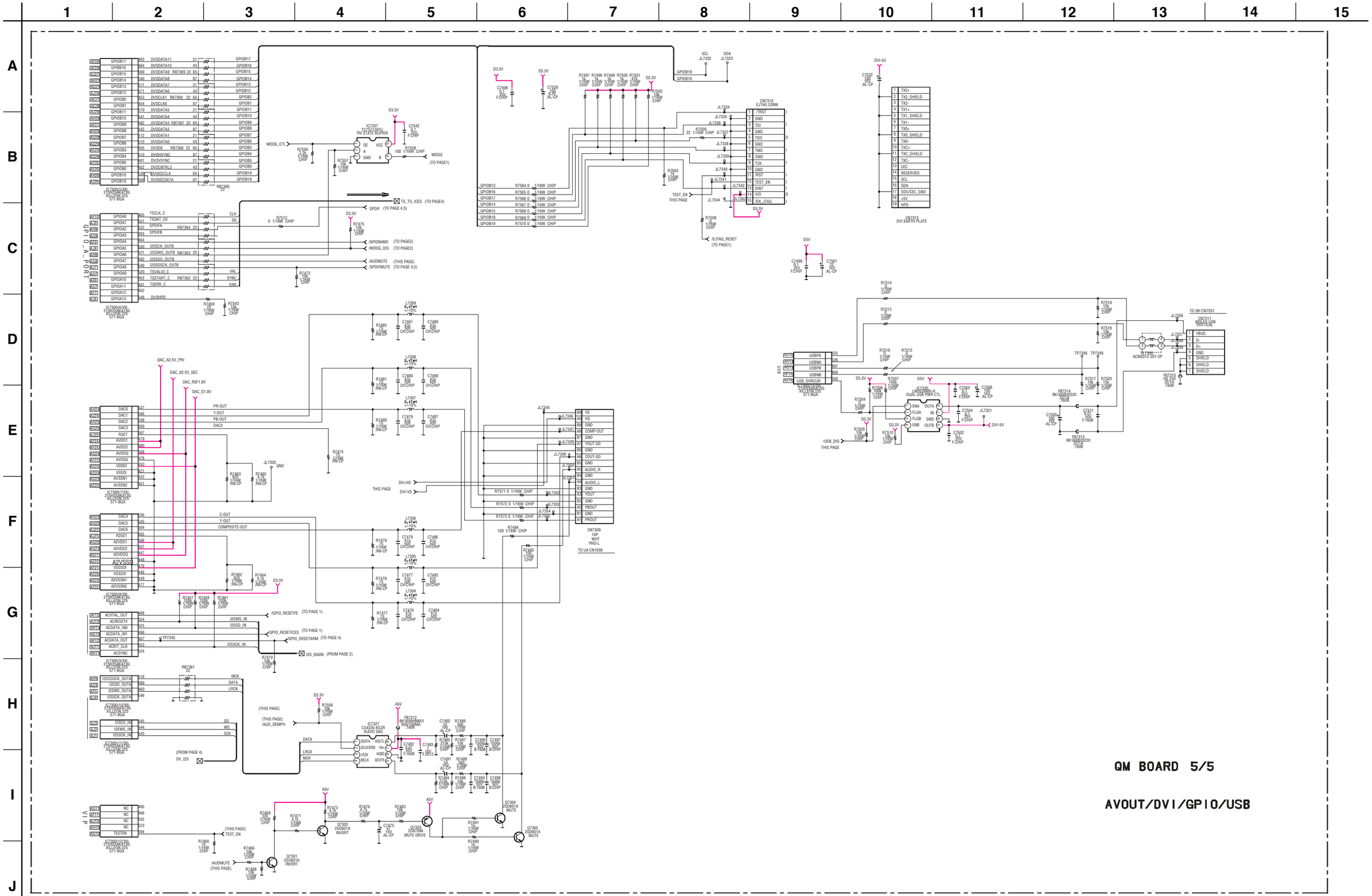

(19) Schematic Diagram of QT Board

Due to the complexity of this board, performing component level fi eld repairs is not recommended. If it is determined that this board has malfunctioned, the Complete Q Box (A-1606-037-B) must be replaced.

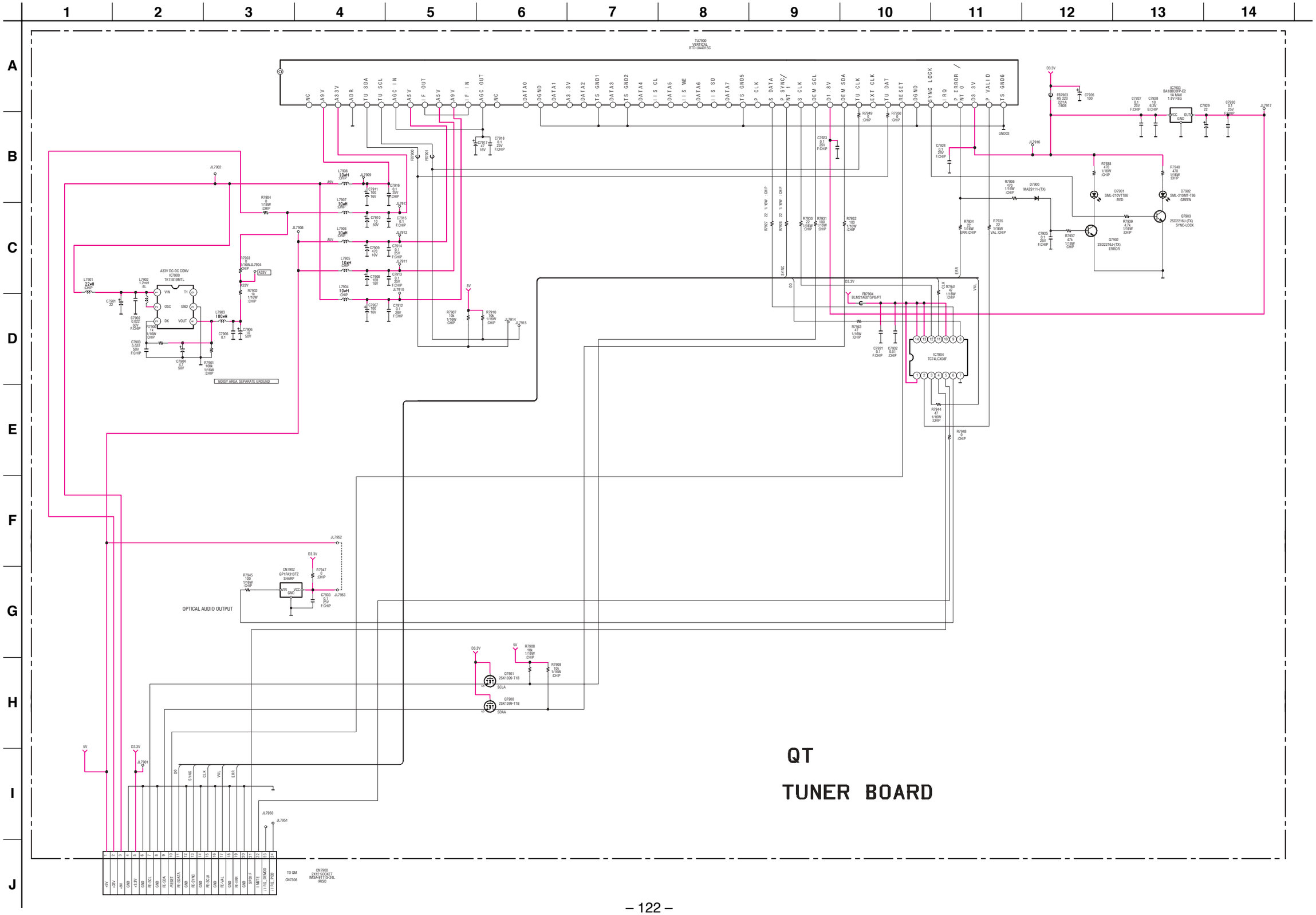

4-5. PRINTED WIRING BOARDS — A BOARD (A Side) —

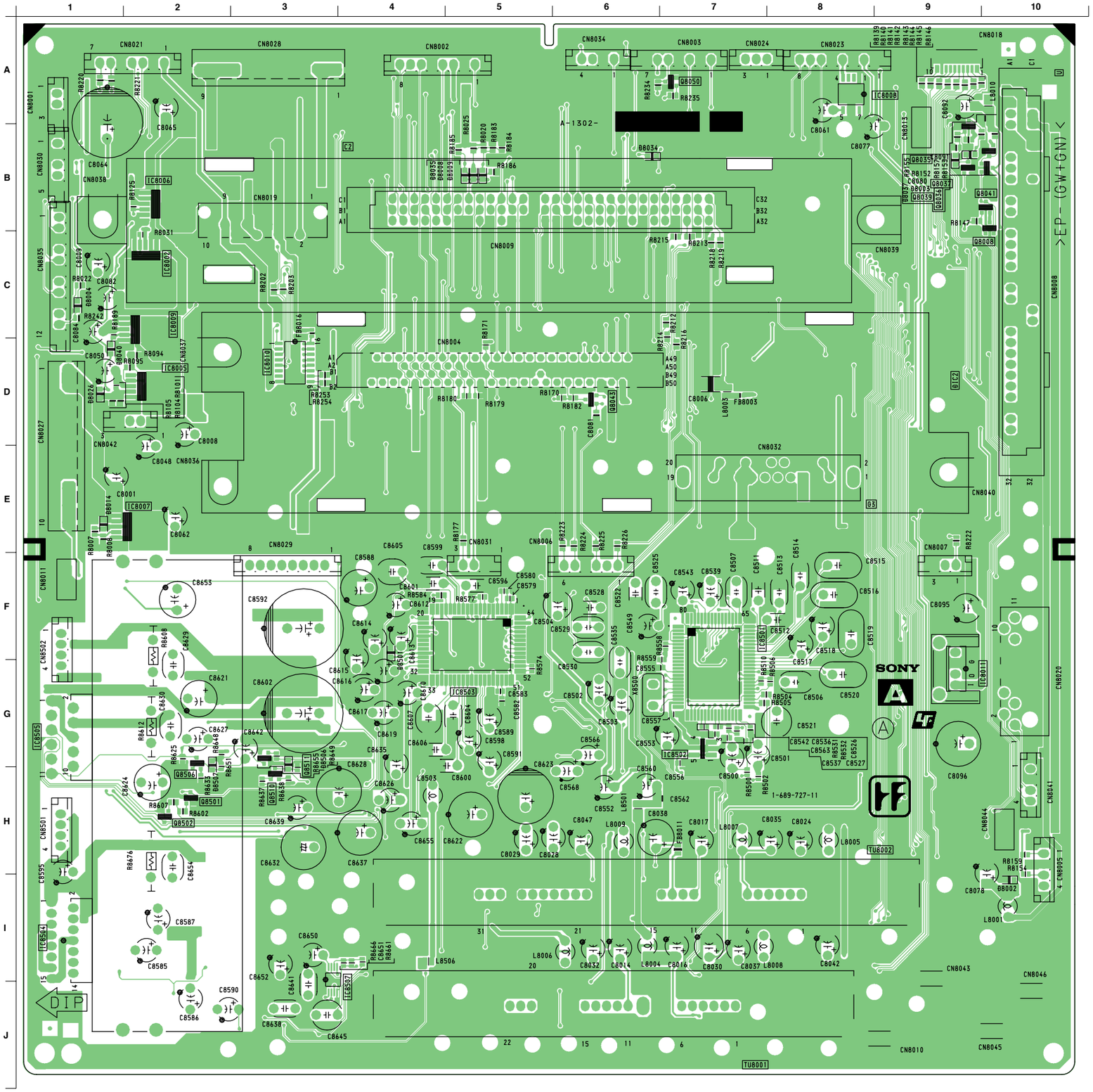

A [TUNER/FAN CONTROL/AUDIO AMP]

• A BOARD SEMICONDUCTOR LOCATION

IC

	Side A	Side B	✻
IC8002	C-2		
IC8005	D-2		
IC8006	B-2		
IC8007	E-2		
IC8008	A-8		
IC8009	C-2		
IC8010	D-3		
IC8011	G-9	G-2	
IC8501	F-7		
IC8502	G-7		
IC8503	G-5		
IC8504	I-1	I-10	
IC8505	G-1	G-10	
IC8507	J-4		

TRANSISTOR

	Side A	Side B	✻
Q8006		H-1	①
Q8008	C-10		②
Q8009		B-2	①
Q8014		C-3	①
Q8015		D-3	①
Q8016		D-4	①
Q8017		D-3	①
Q8018		D-4	①
Q8019		H-4	①
Q8021		I-6	①
Q8022		D-4	①
Q8023		I-6	①
Q8024		D-9	①
Q8025		H-6	①
Q8027		H-5	①
Q8029		I-6	①
Q8030		H-6	①
Q8034		E-9	①
Q8035	B-9		②
Q8036	B-9		②
Q8037	B-9		②
Q8038		I-1	①
Q8039	B-9		②
Q8041	B-10		②
Q8044		D9	①
Q8045		C-8	①
Q8046		B-9	①
Q8047		D-8	①
Q8048		C-8	①
Q8049		B-8	①
Q8050	A-7		②
Q8051		C-3	①
Q8052		D-2	①
Q8500		J-8	①
Q8501	H-2		②
Q8502	H-2		②
Q8505		H-7	①
Q8506	G-2		②
Q8507		G-6	①
Q8508		H-7	①
Q8509		H-7	①
Q8510	H-3		②
Q8511	G-3		②
Q8512		F-10	①
Q8513		I-7	①

DIODE

	Side A	Side B	✻
D8001		D-7	③
D8003	B-9		③
D8004	C-1		③
D8008	B-5		③
D8009	B-5		③
D8010		I-3	③
D8023		H-5	③
D8026	D-1		③
D8027		B-9	③
D8029		E-9	③
D8030		E-9	③
D8033		B-4	③
D8034	A-6		③
D8035	B-5		③
D8037	B-9		③
D8038		G-2	③
D8039		G-2	③
D8040	D-1		③
D8500		I-9	③
D8501	F-4		③
D8502		H-6	⑨
D8503		H-6	⑪
D8505		G-8	③
D8506	G-3		③
D8507	H-2		③
D8508		F-10	③
D8509		F-9	③
D8510		F-10	③
D8511		I-10	③

✻: Refer to Terminal name of semiconductors in silk screen printed circuit (see page 103)

— A BOARD (B Side) —

A [TUNER/FAN CONTROL/AUDIO AMP]

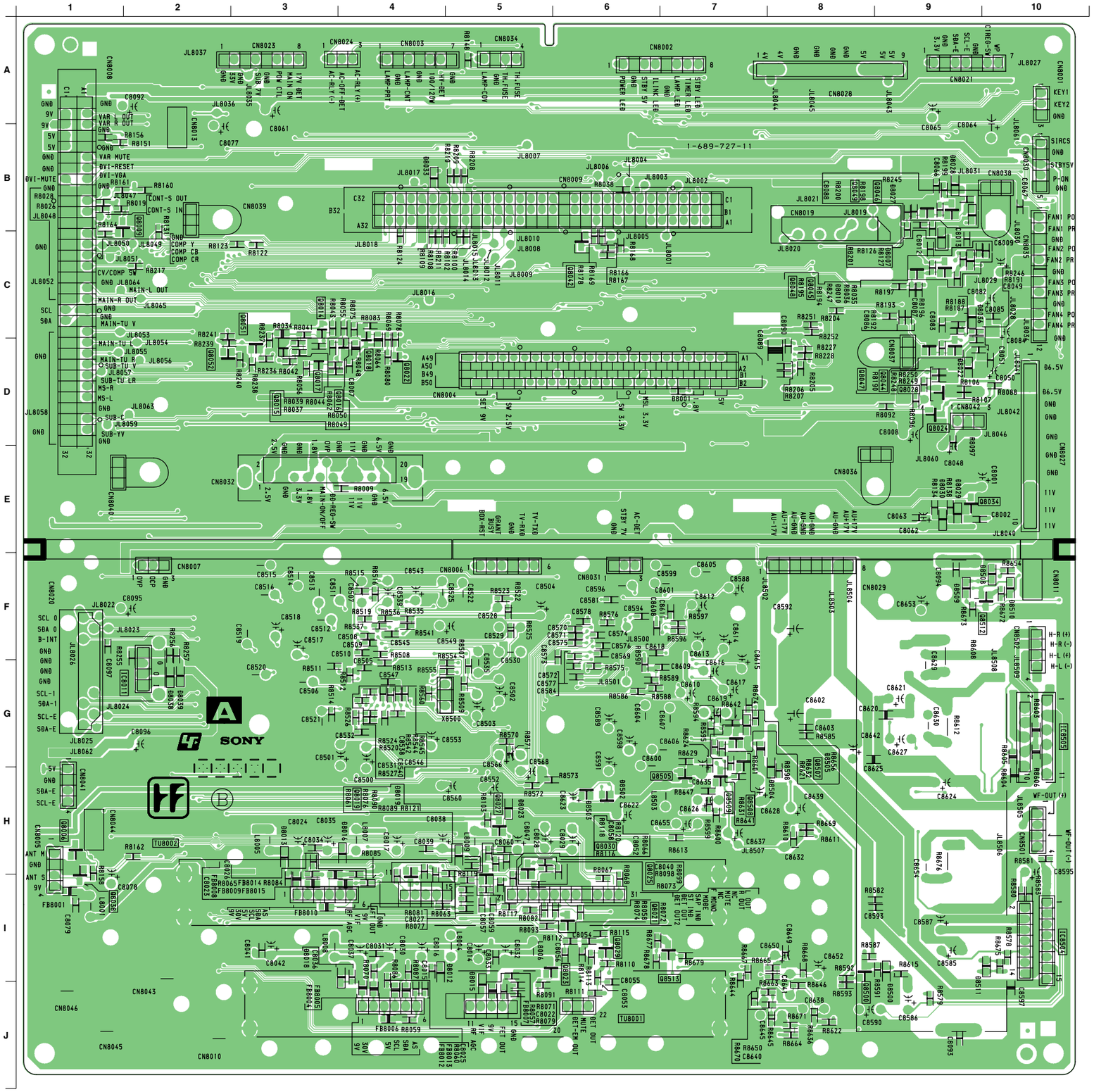

F [AC FILTER]

— F BOARD (A Side) —

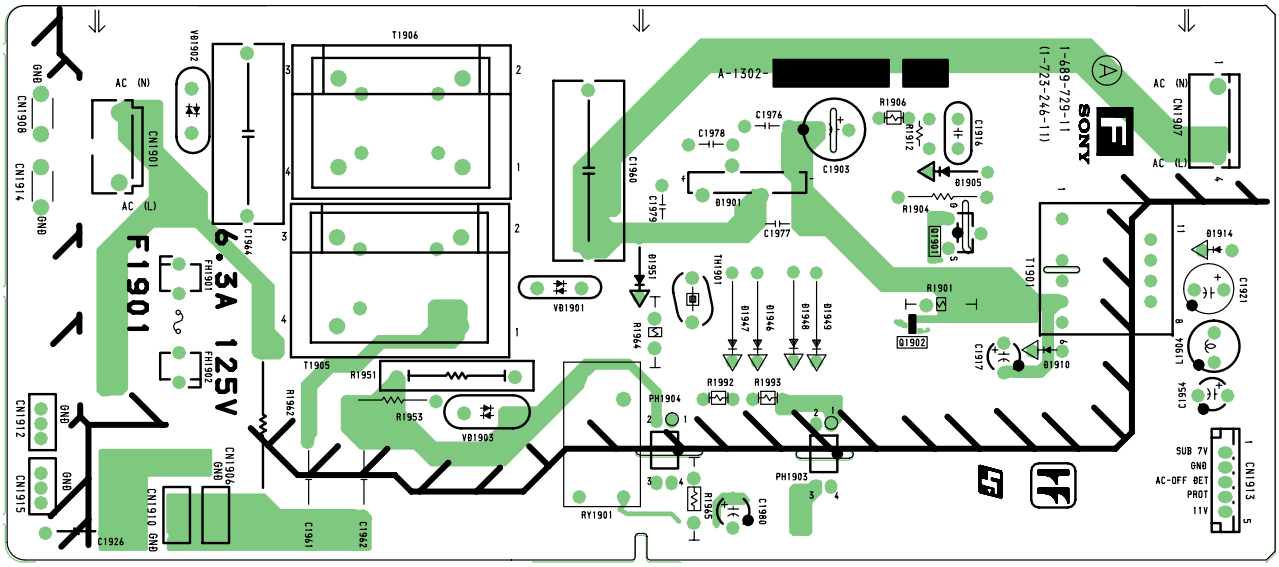

— F BOARD (B Side) —

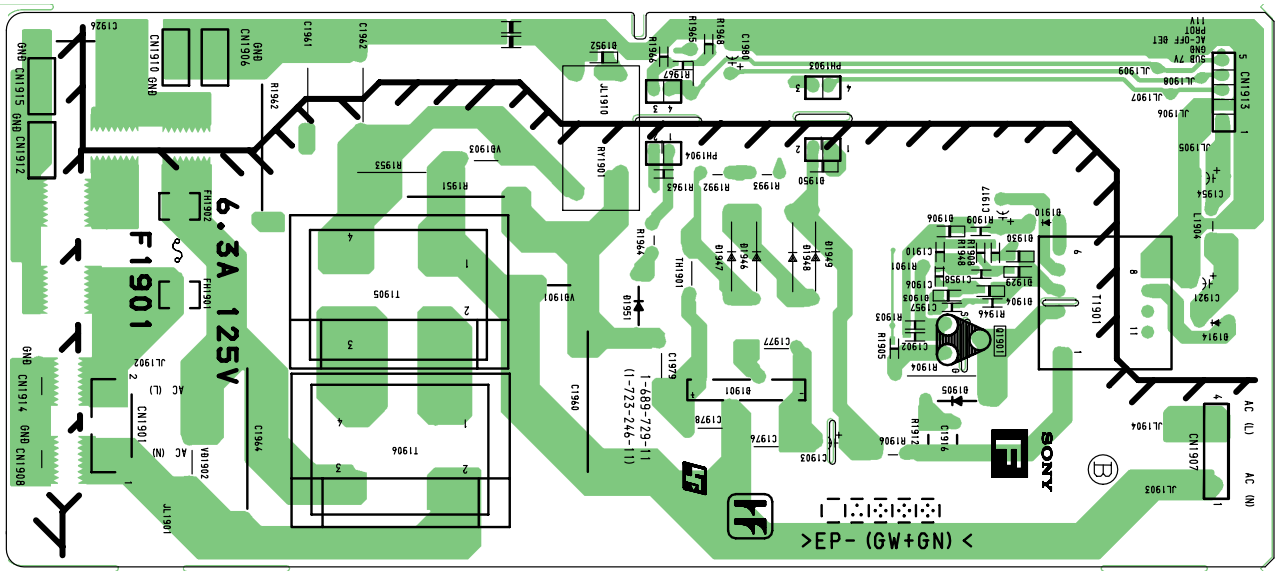

— G1 BOARD (A Side) —

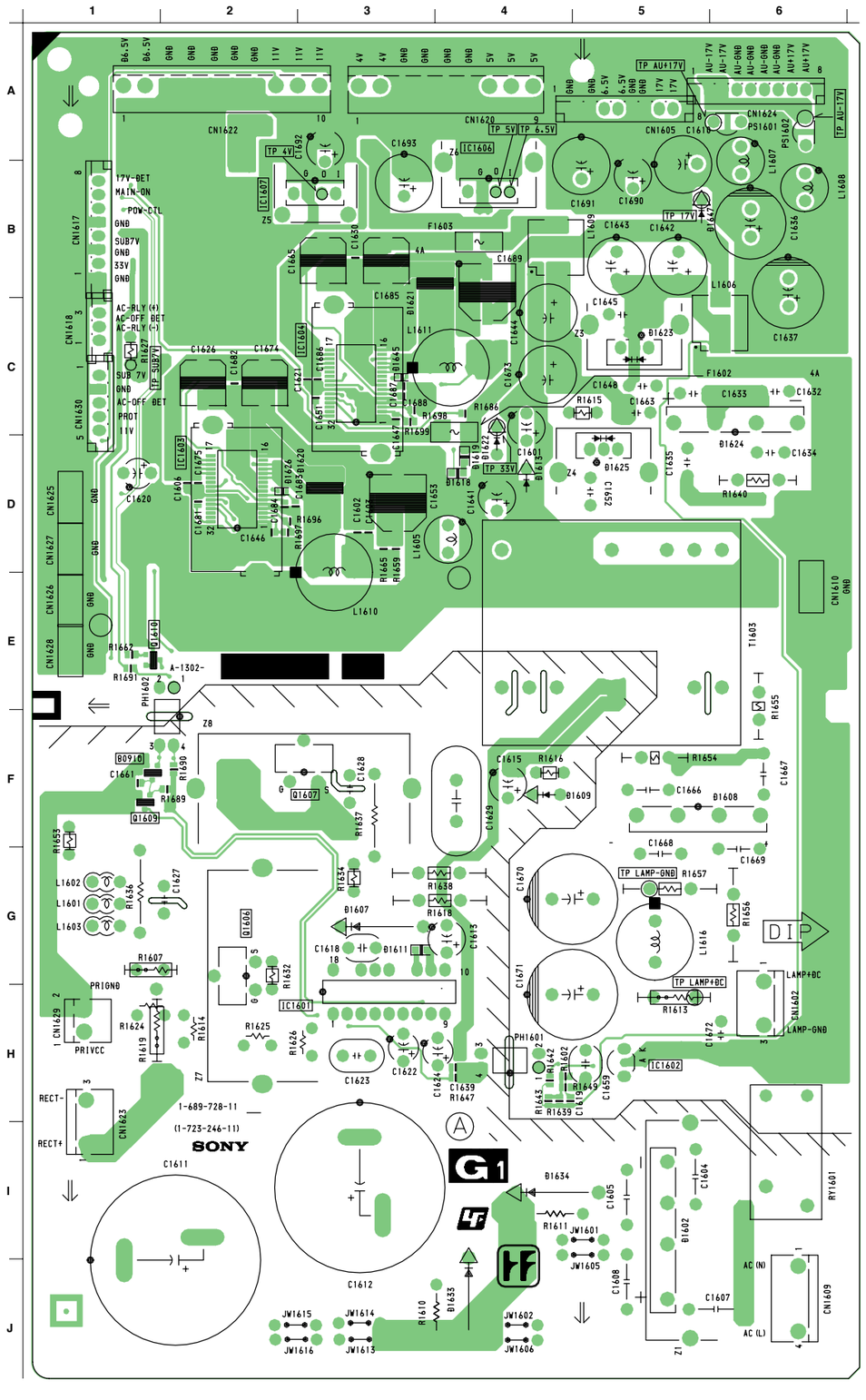

G1 [POWER SUPPLY]

• G1 BOARD SEMICONDUCTOR LOCATION

IC	Side A	Side B	✻
IC1601	H-3	H-4	
IC1602	H-5	H-2	
IC1603	D-2		
IC1604	C-3		
IC1606	A-4	A-3	
IC1607	B-2	B-5	

TRANSISTOR	Side A	Side B	✻
Q1603		D-6	①
Q1604		D-6	①
Q1605		D-6	①
Q1606	G-2	H-5	
Q1607	F-3	F-4	
Q1608	F-1		②
Q1609	F-1		②
Q1610	E-1		②

DIODE	Side A	Side B	✻
D1602	I-5	I-2	
D1607	G-3	G-4	
D1608	F-6	F-2	
D1612		C-3	
D1613	D-4	D-3	
D1618	D-4		③
D1619	D-4		③
D1620	D-3		⑨
D1621	B-3		⑨
D1622	D-4	D-3	
D1623	C-5	C-2	
D1624	D-6	D-2	
D1625	D-5	D-2	
D1626	D-2		③
D1628		B-3	③
D1631		H-1	③
D1632		B-3	③
D1633	J-3	J-4	
D1634	I-4	I-3	
D1635		A-4	③
D1638		B-3	③
D1639		B-3	③
D1640		D-4	③
D1641		D-4	③
D1642		B-3	③
D1643		B-3	③
D1645	C-3		③
D1646		C-6	③
D1647	B-5	B-2	

✻: Refer to Terminal name of semiconductors in silk screen printed circuit (see page 103)

— G1 BOARD (B Side) —

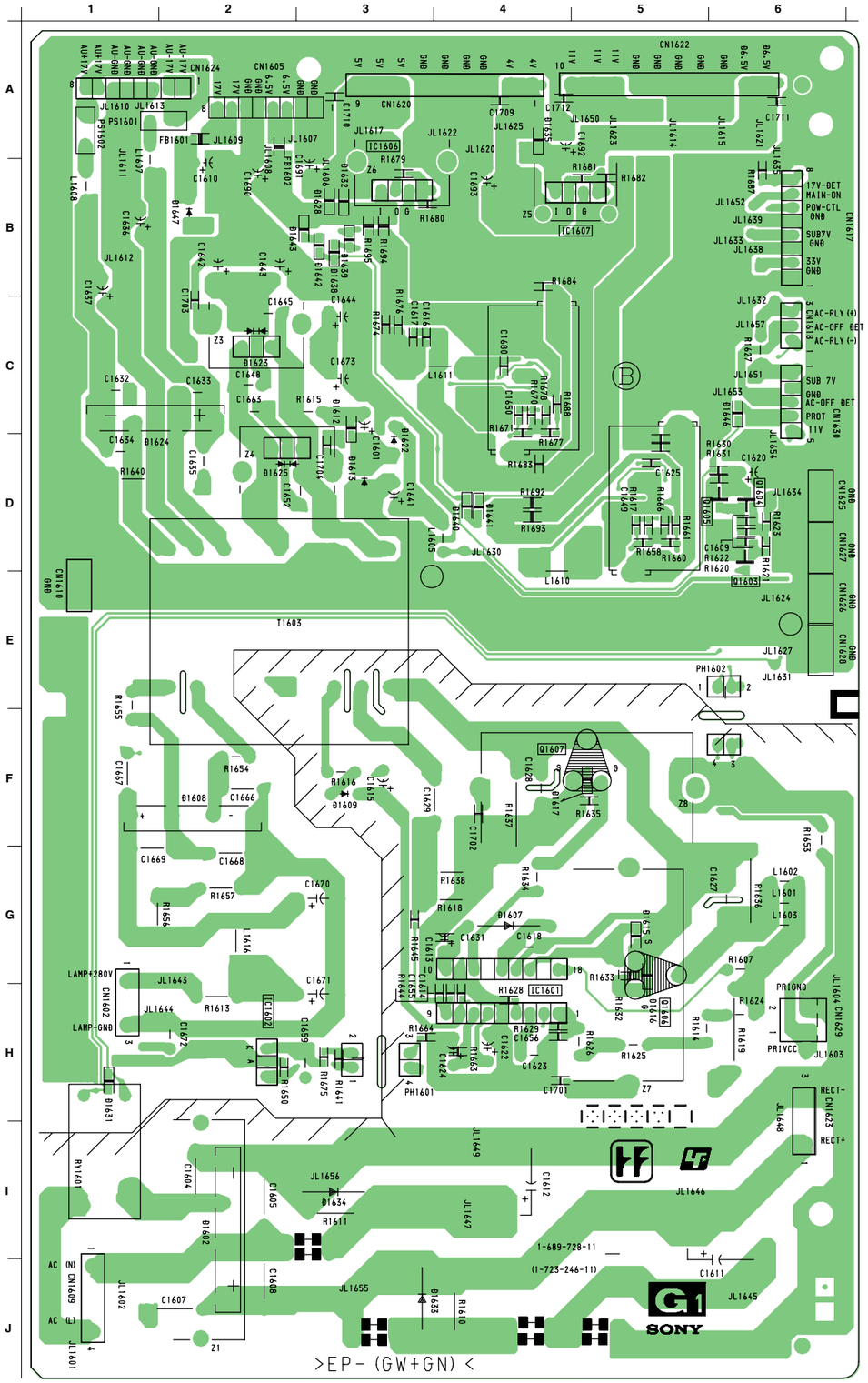

G1 [POWER SUPPLY]

G2 ［POWER SUPPLY］

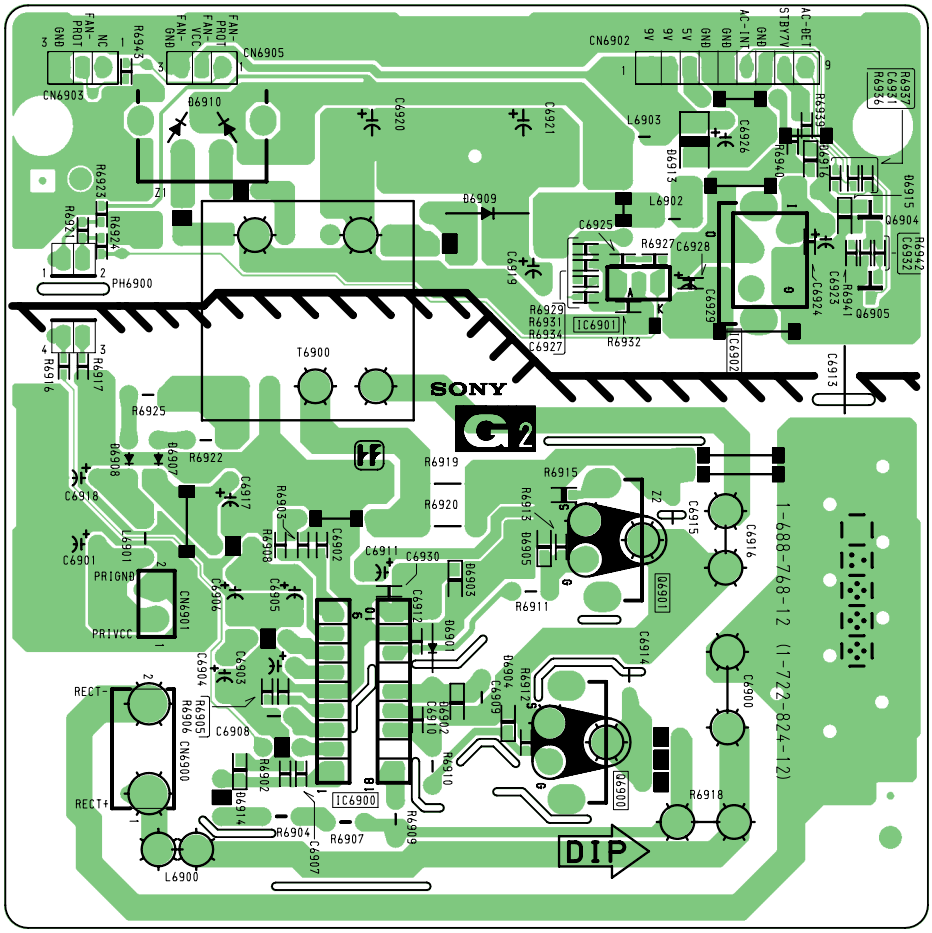

H1 [POWER SWITCH, SIRCS]

— H1 BOARD (A Side) —

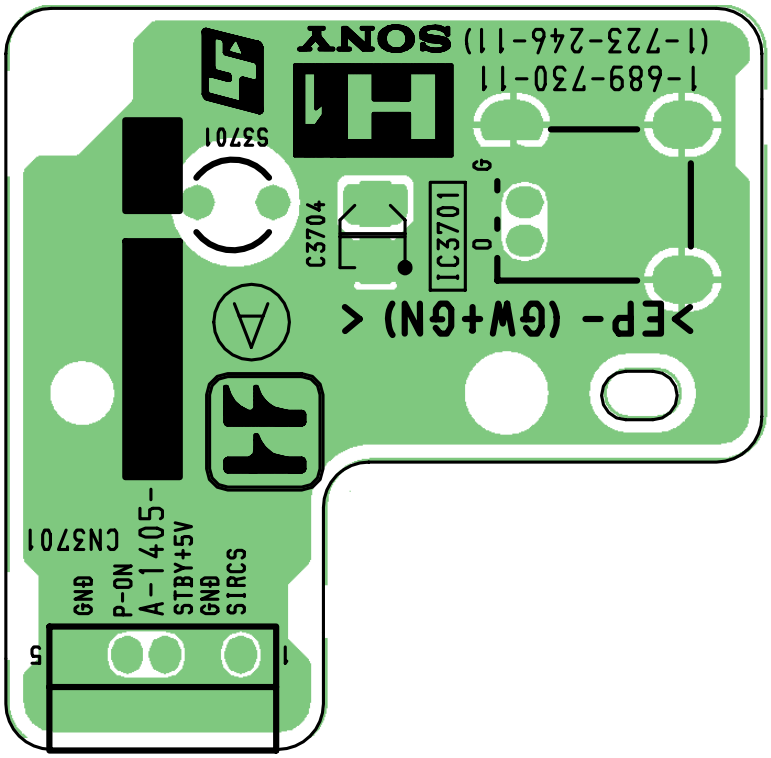

— H1 BOARD (B Side) —

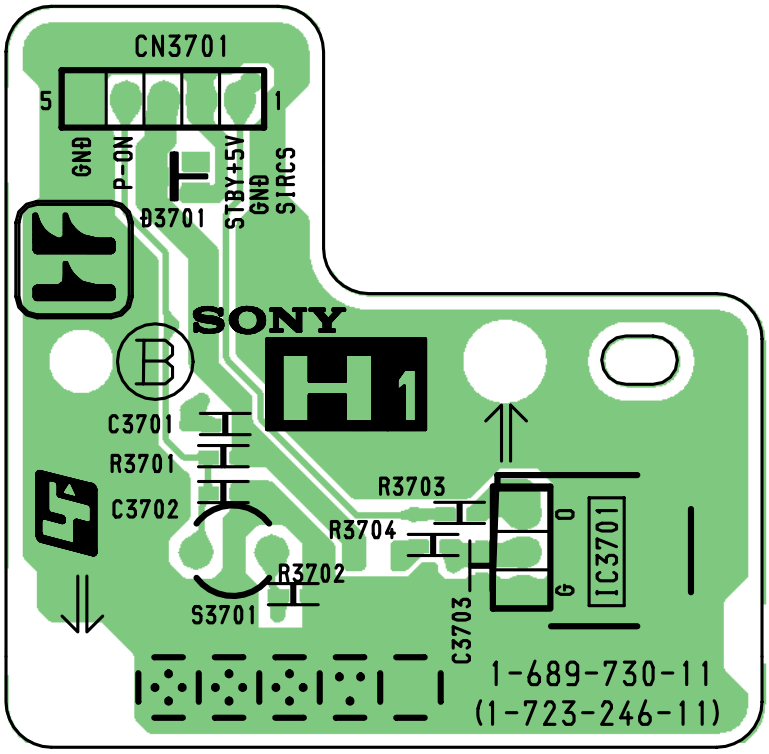

H3 [VIDEO 2 INPUT/KEY INPUT]

— H3 BOARD (A Side) —

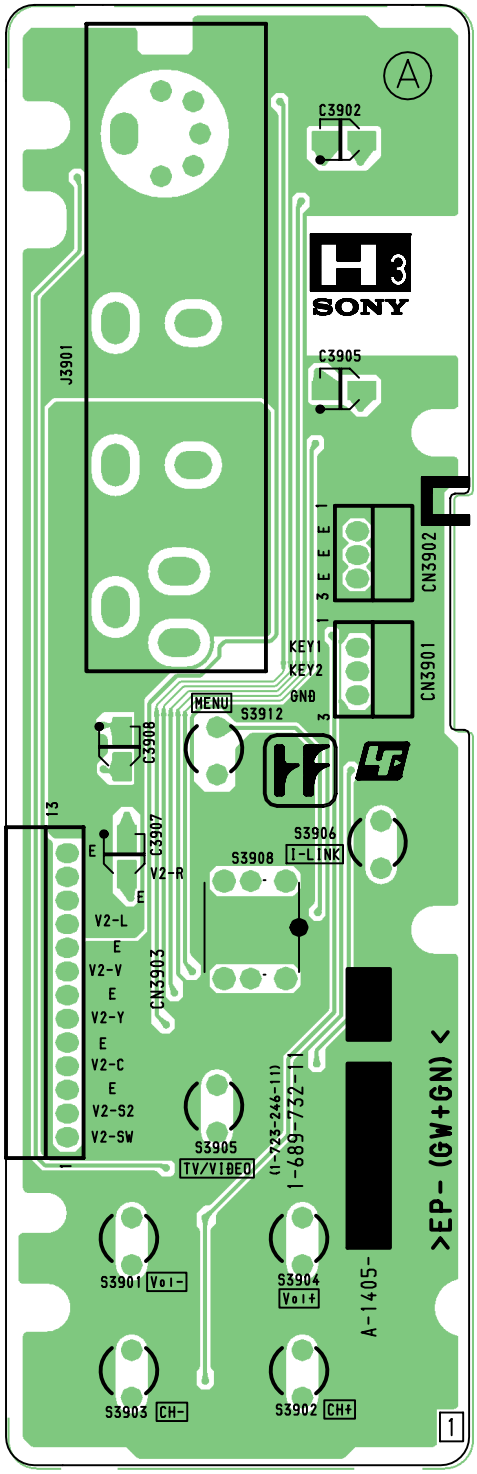

— H3 BOARD (B Side) —

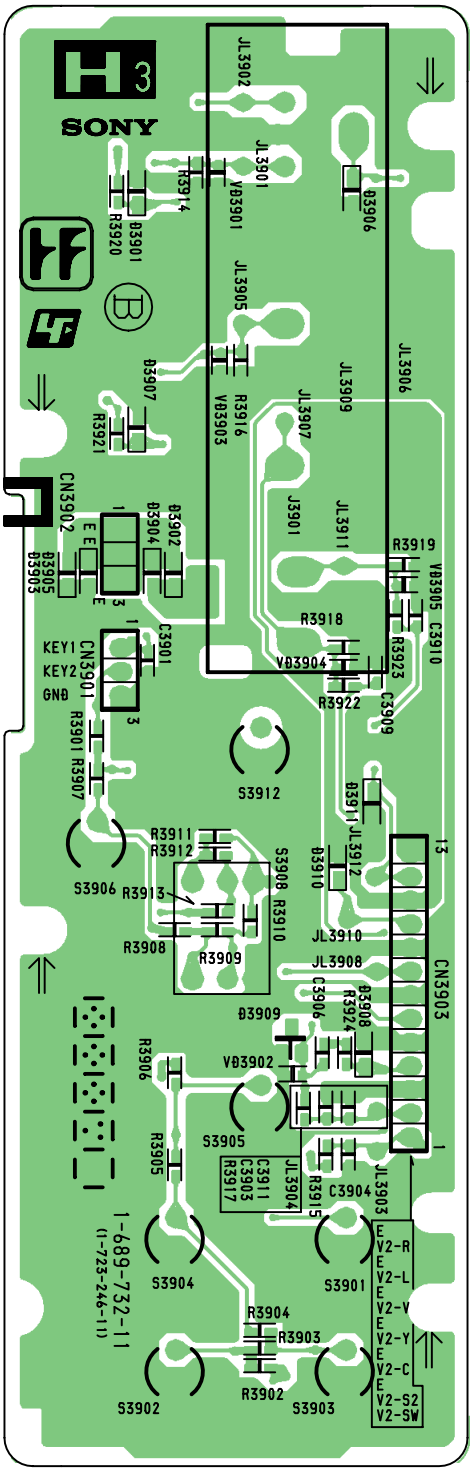

H4 [EEPROM]

— H4 BOARD (A Side) —

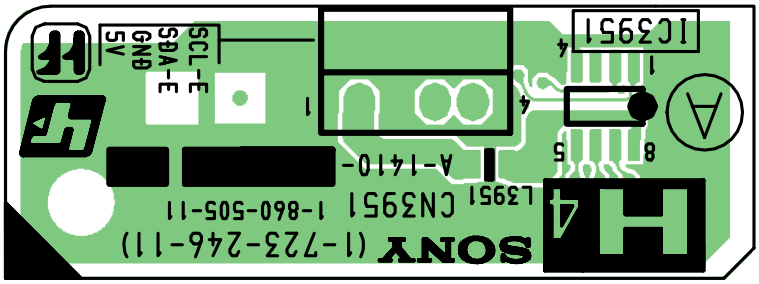

— H4 BOARD (B Side) —

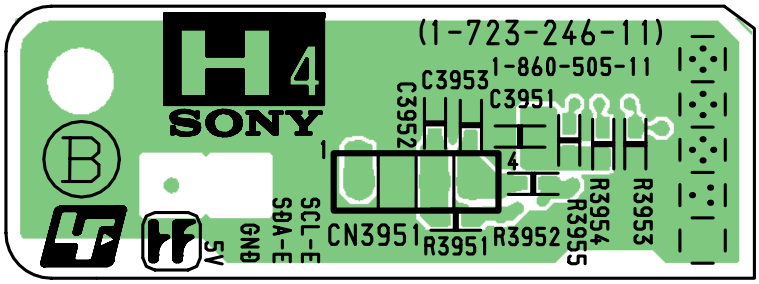

T [LAMP DOOR SWITCH]

— T BOARD (A Side) —

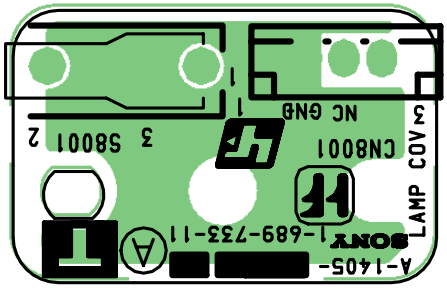

— T BOARD (B Side) —

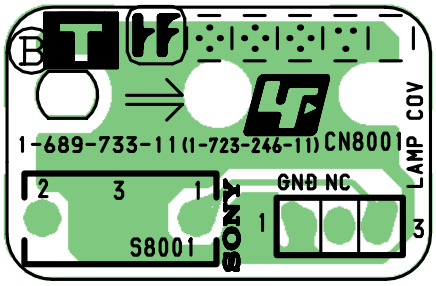

— U BOARD (A Side) —

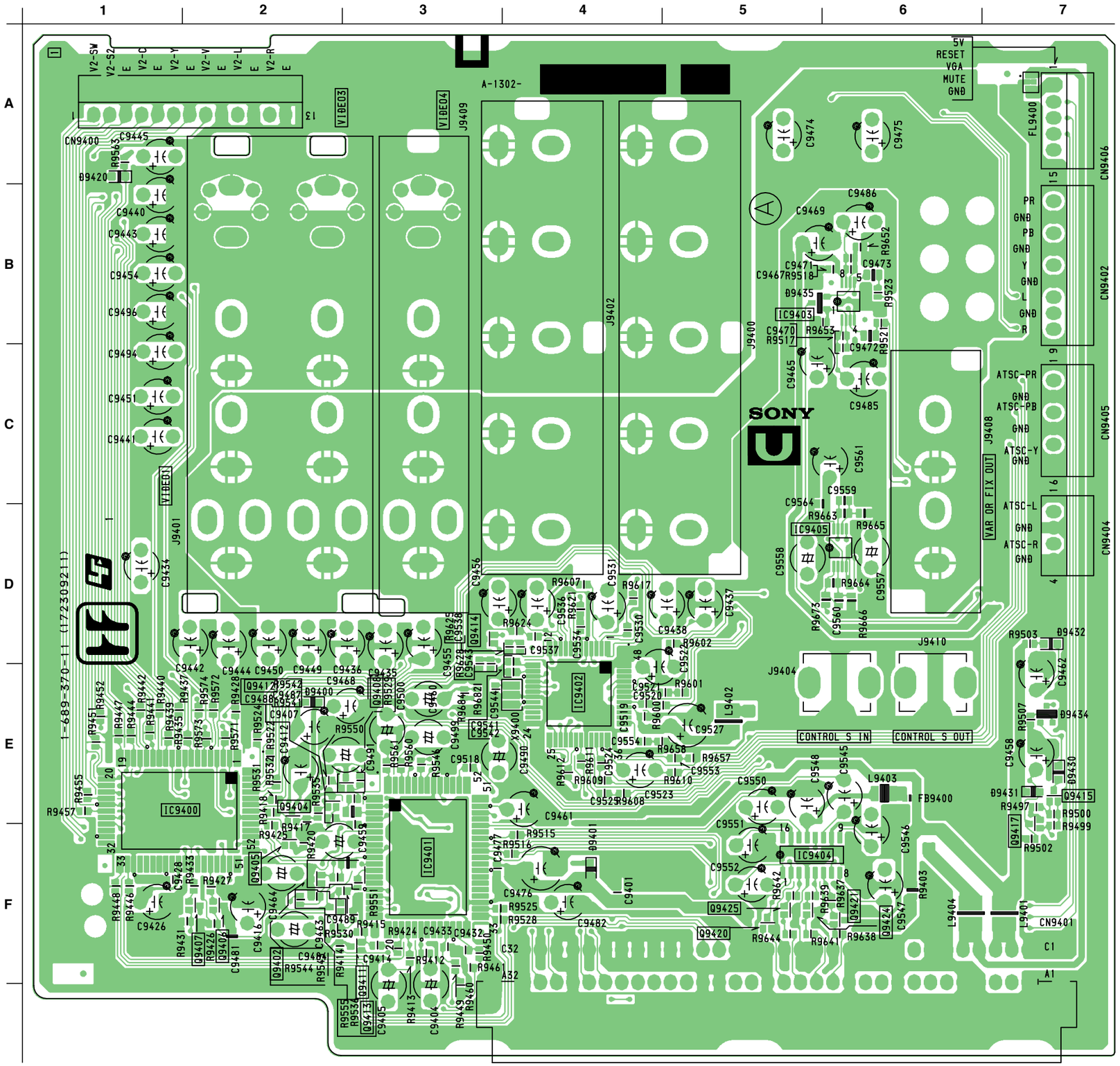

U [VIDEO INPUT]

• U BOARD SEMICONDUCTOR LOCATION

IC	Side A	Side B	✻
IC9400	E-1		
IC9401	F-3		
IC9402	E-4		
IC9403	B-5		
IC9404	F-5		
IC9405	D-6		

TRANSISTOR	Side A	Side B	✻
Q9400		F-6	①
Q9401		F-5	①
Q9402	F-2		②
Q9403		F-6	①
Q9404	E-2		②
Q9405	F-2		②
Q9406	F-2		②
Q9407	F-2		②
Q9408	E-3		②
Q9409		E-5	①
Q9410		E-5	①
Q9411	F-3		②
Q9412	E-2		②
Q9413	G-3		②
Q9414	D-3		②
Q9415	E-7		②
Q9416		E-1	①
Q9417	E-7		②
Q9418		E-1	①
Q9419		B-3	①
Q9420	F-5		②
Q9421	F-6		②
Q9422		C-2	①
Q9423		C-2	①
Q9424	F-6		②
Q9425	F-5		②
Q9426		C-2	①
Q9427		F-2	①
Q9428		C-2	①

DIODE	Side A	Side B	✻
D9400	E-2		③
D9401	F-4		③
D9416		B-6	③
D9425		B-6	③
D9430	E-7		③
D9431	E-7		③
D9432	D-7		③
D9433		E-1	③
D9434	E-7		⑪
D9435	B-5		⑨
D9438		D-2	③
D9440		B-2	③
D9441		B-2	③
D9445		B-5	③
D9446		D-2	③

✻: Refer to Terminal name of semiconductors in silk screen printed circuit (see page 103)

— U BOARD (B Side) —

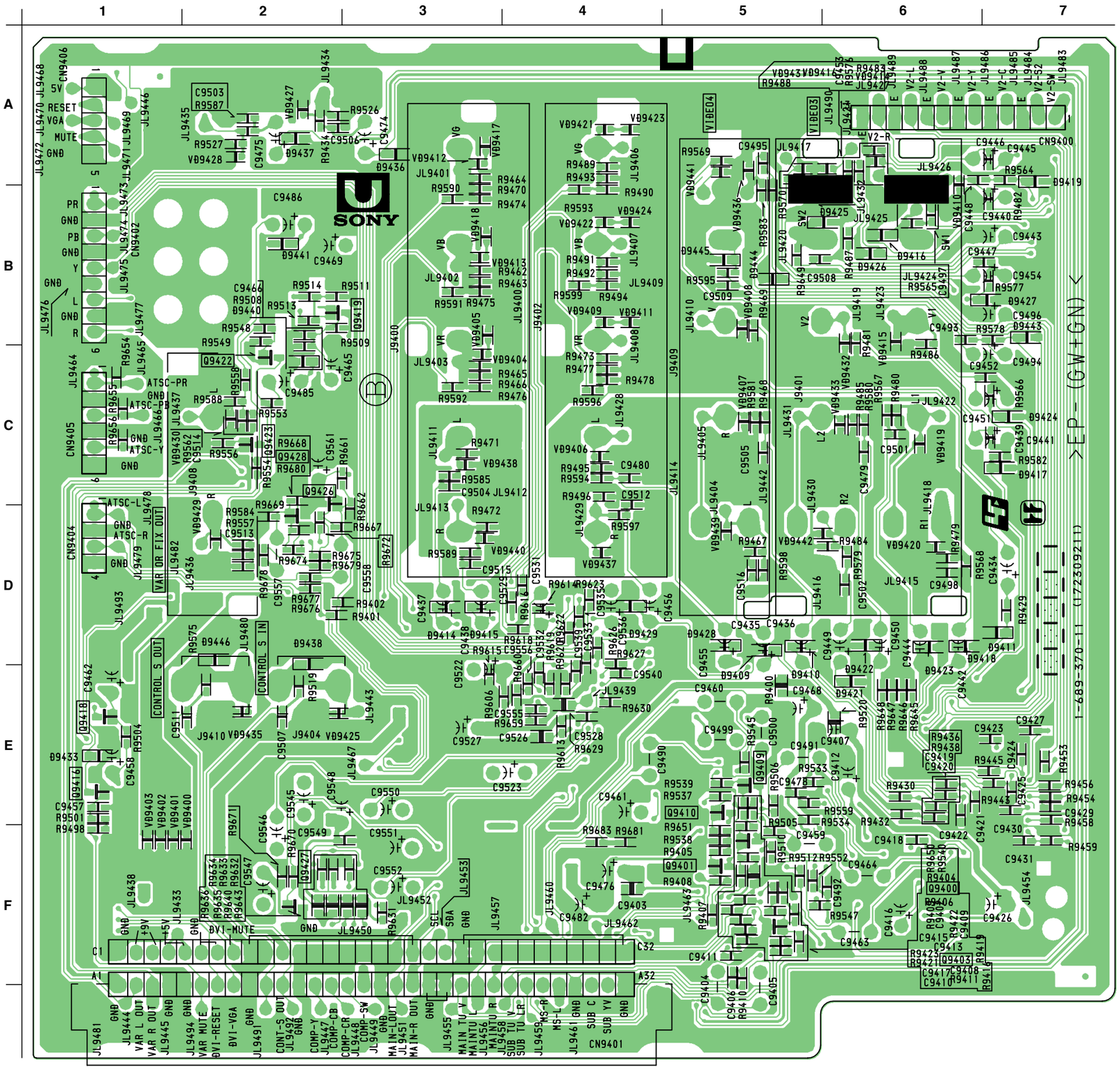

U [VIDEO INPUT]

— UD BOARD (A Side) —

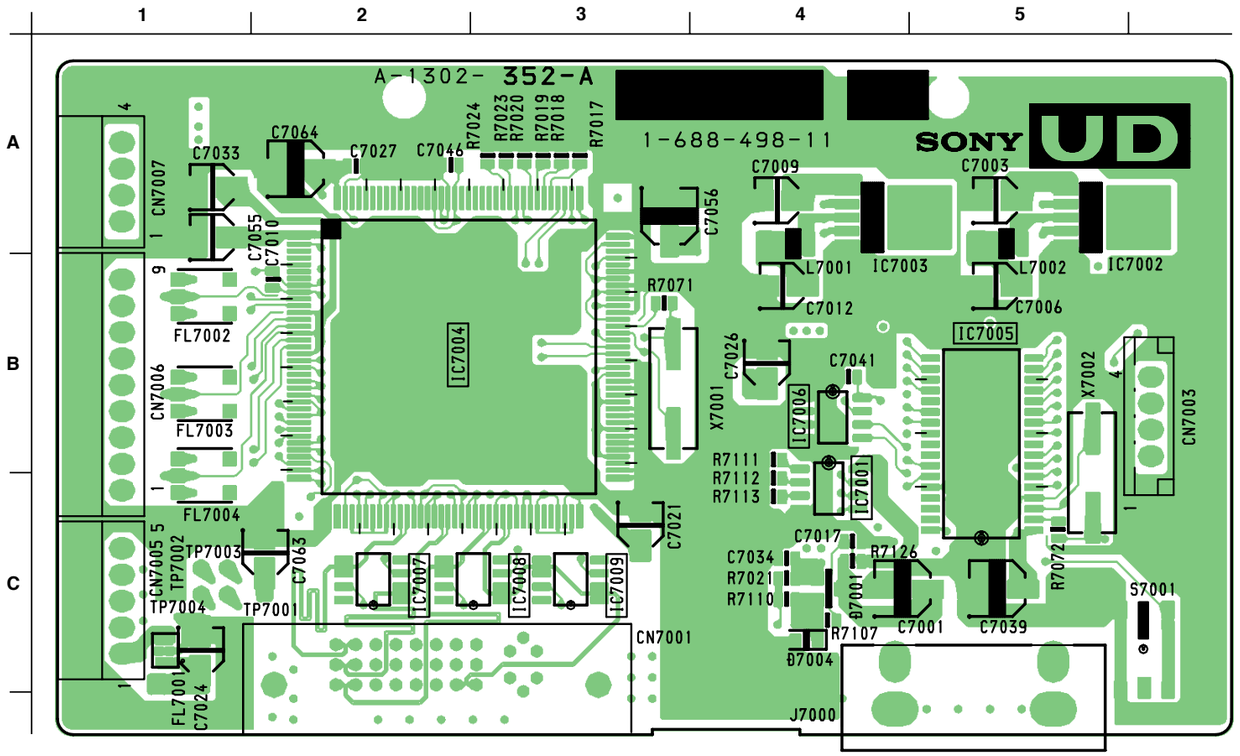

— UD BOARD (B Side) —

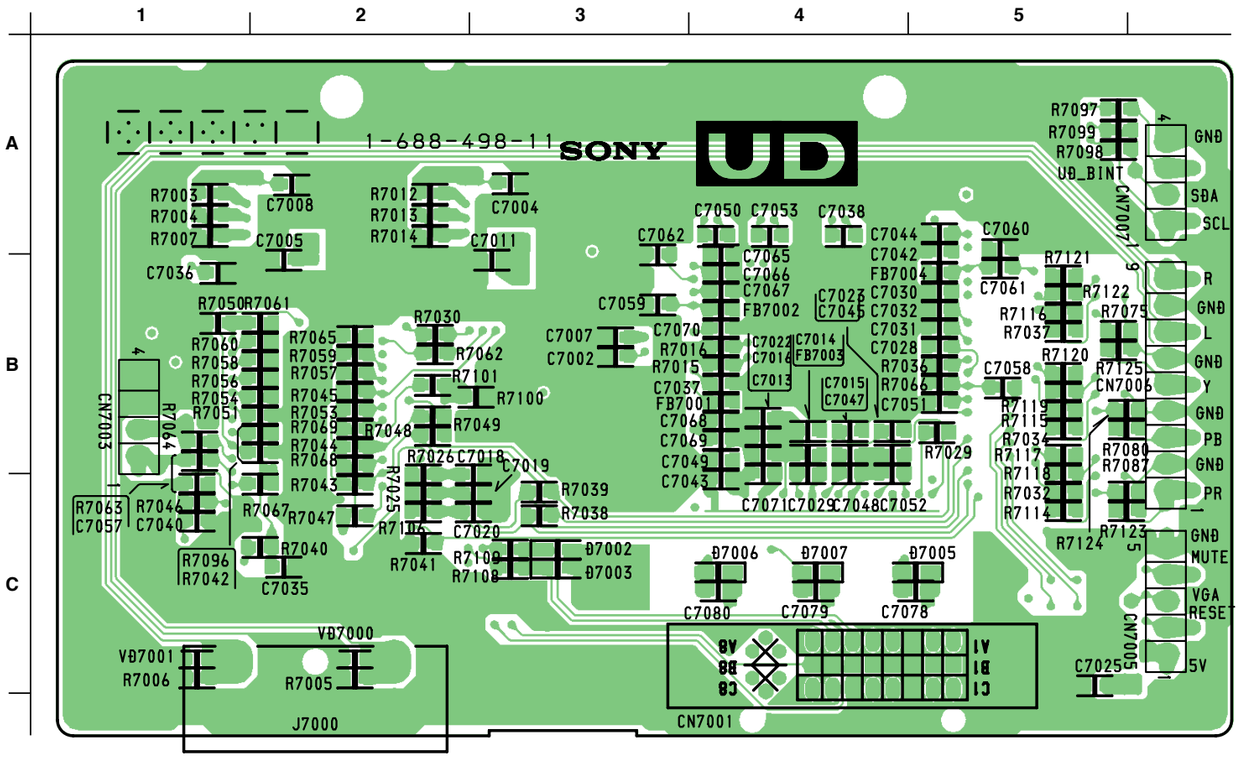

UD [DVI IN]

• U BOARD SEMICONDUCTOR LOCATION

IC	Side A	Side B	✻
IC7001	C-4		
IC7002	A-5		
IC7003	A-4		
IC7004	B-2		
IC7005	B-5		
IC7006	B-4		
IC7007	C-2		
IC7008	C-3		
IC7009	C-3		

DIODE	Side A	Side B	✻
D7001	C-4		⑨
D7002		C-3	③
D7003		C-3	③
D7004	C-4		③
D7006		C-4	③

✻: Refer to Terminal name of semiconductors in silk screen printed circuit (see page 103)

QH [MEMORY STICK]

Due to the complexity of this board, performing component level fi eld repairs is not recommended. If it is determined that this board has malfunctioned, the Complete Q Box (A-1606-037-B) must be replaced.

— QH BOARD (A Side) —

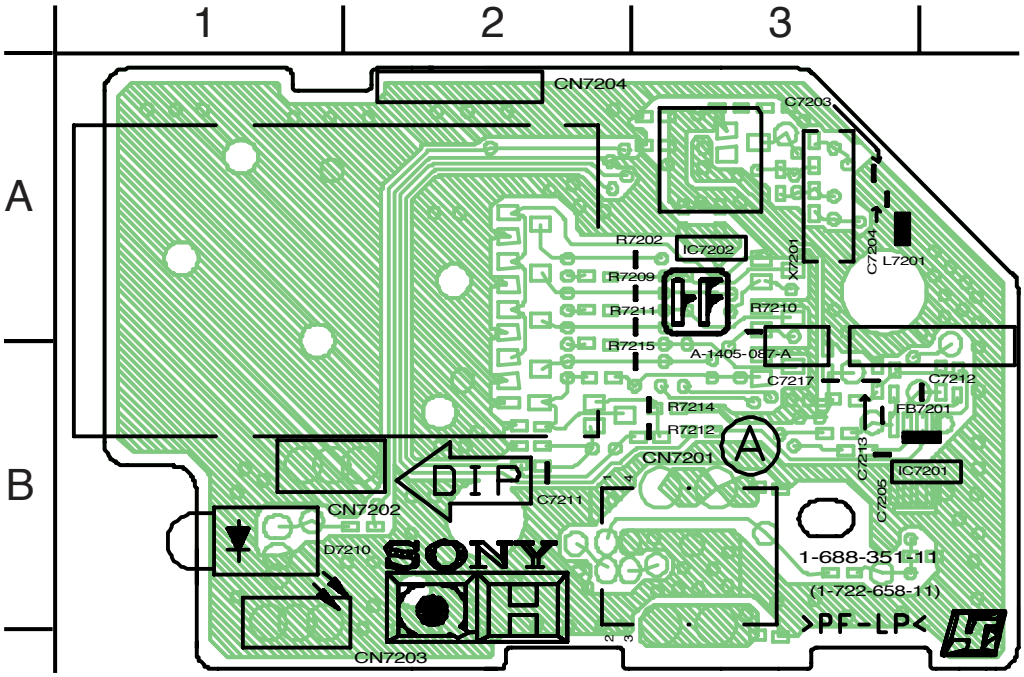

— QH BOARD (B Side) —

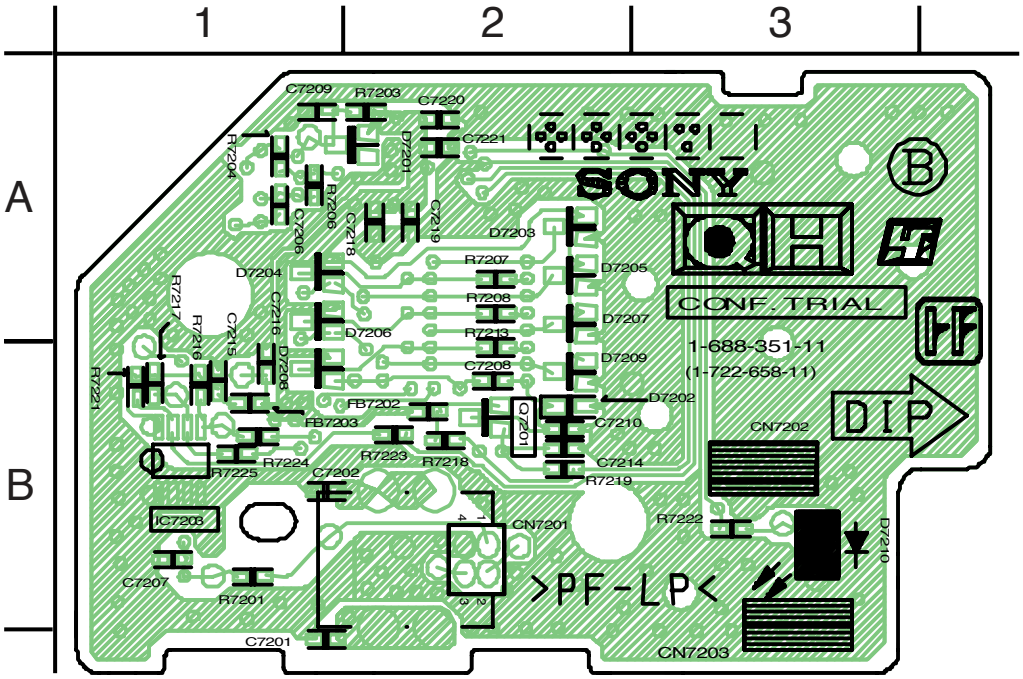

QI [I LINK, DV]

Due to the complexity of this board, performing component level fi eld repairs is not recommended. If it is determined that this board has malfunctioned, the Complete Q Box (A-1606-037-B) must be replaced.

— QI BOARD (A Side) —

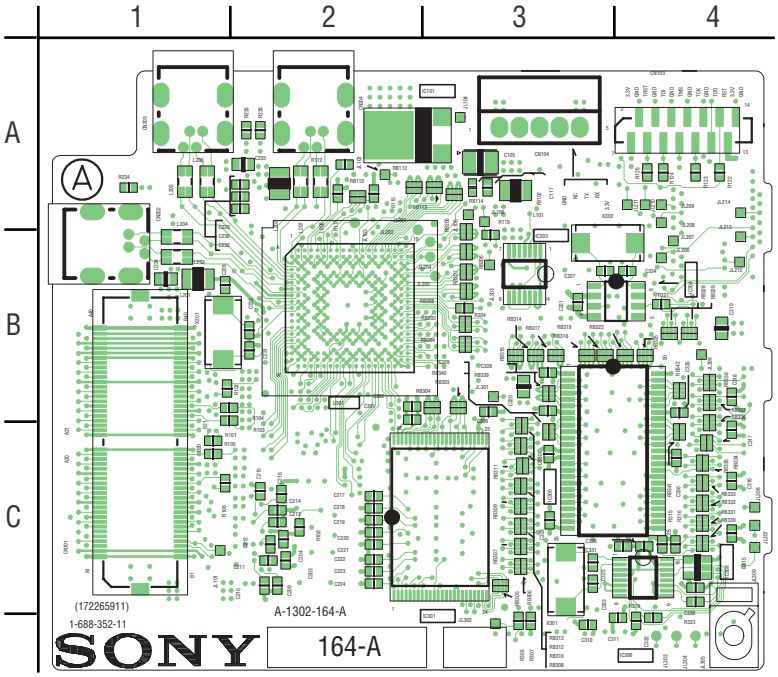

— QI BOARD (B Side) —

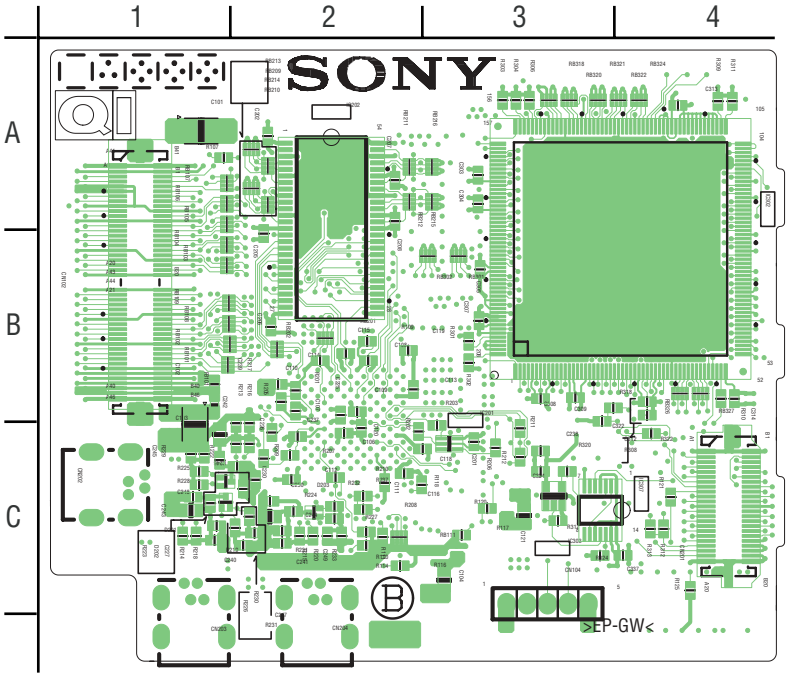

— QM BOARD (A Side) —

QM [POWER/RESET/UART/FLEXBUS/IDE/DDR /PCI/FE-TS/AVOUT/DVI/GPIO/USB]

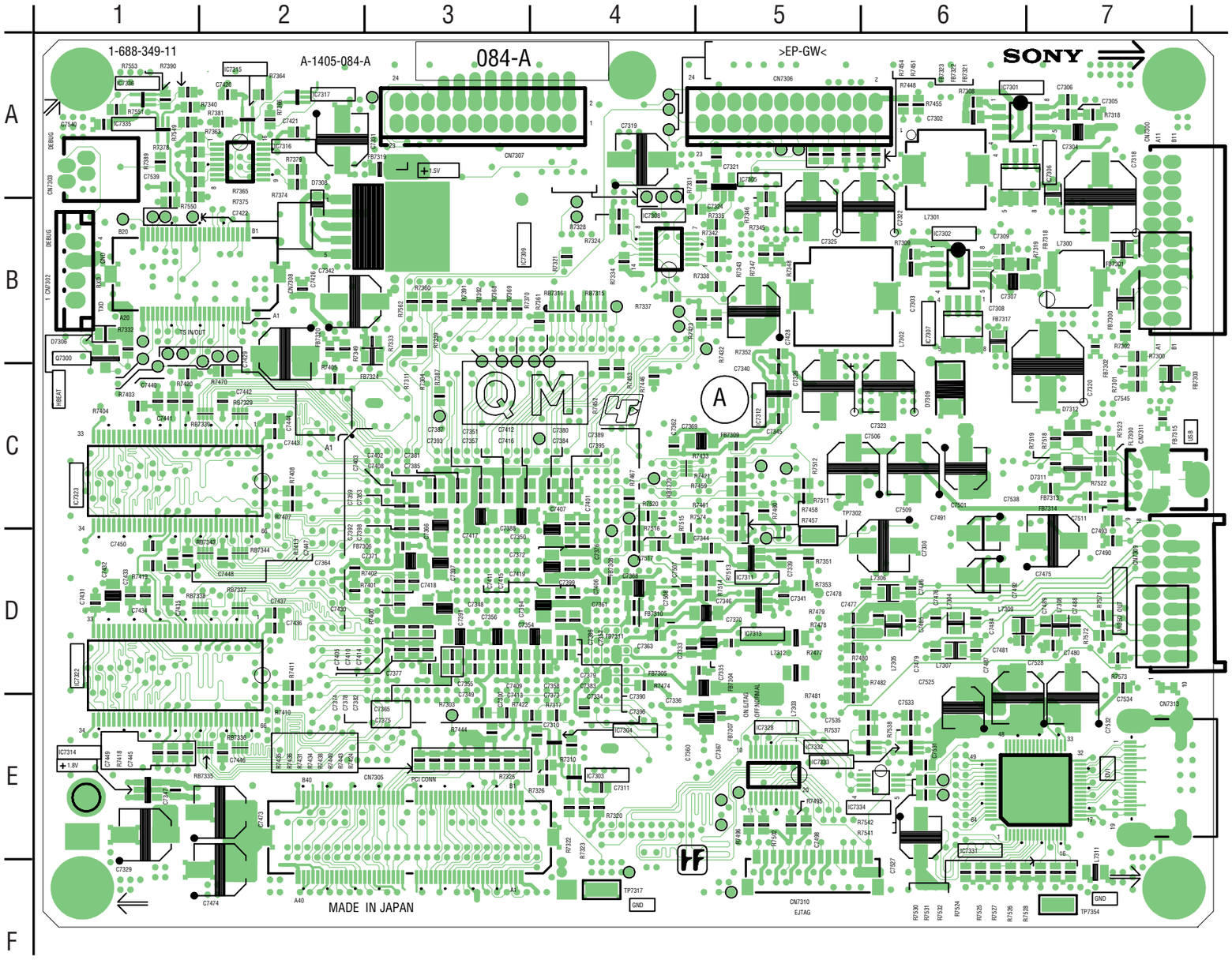

Due to the complexity of this board, performing component level fi eld repairs is not recommended. If it is determined that this board has malfunctioned, the Complete Q Box (A-1606-037-B) must be replaced.

— QM BOARD (B Side) —

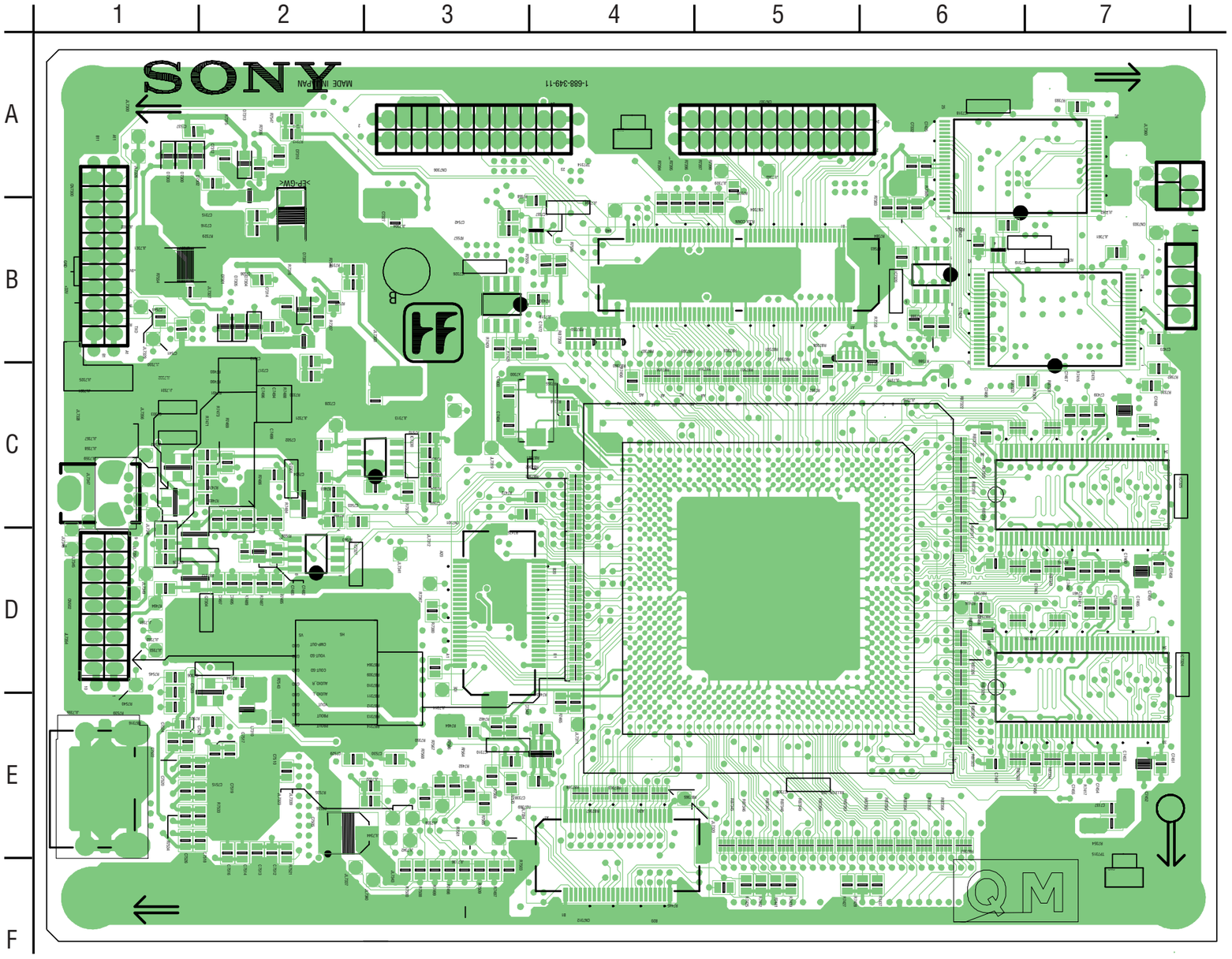

QM [POWER/RESET/UART/FLEXBUS/IDE/DDR /PCI/FE-TS/AVOUT/DVI/GPIO/USB]

Due to the complexity of this board, performing component level fi eld repairs is not recommended. If it is determined that this board has malfunctioned, the Complete Q Box (A-1606-037-B) must be replaced.

QT [TUNER]

Due to the complexity of this board, performing component level fi eld repairs is not recommended. If it
is determined that this board has malfunctioned, the Complete Q Box (A-1606-037-B) must be replaced.

— QT BOARD (A Side) —

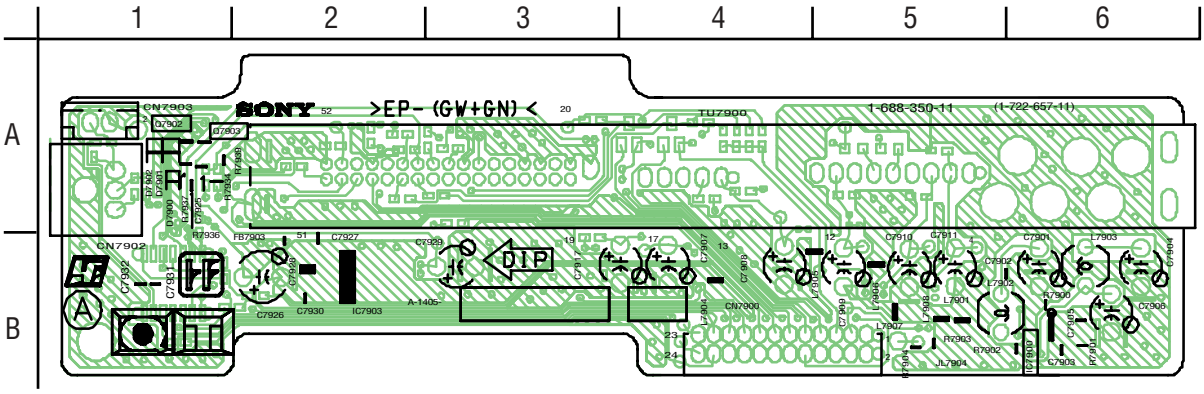

— QT BOARD (B Side) —

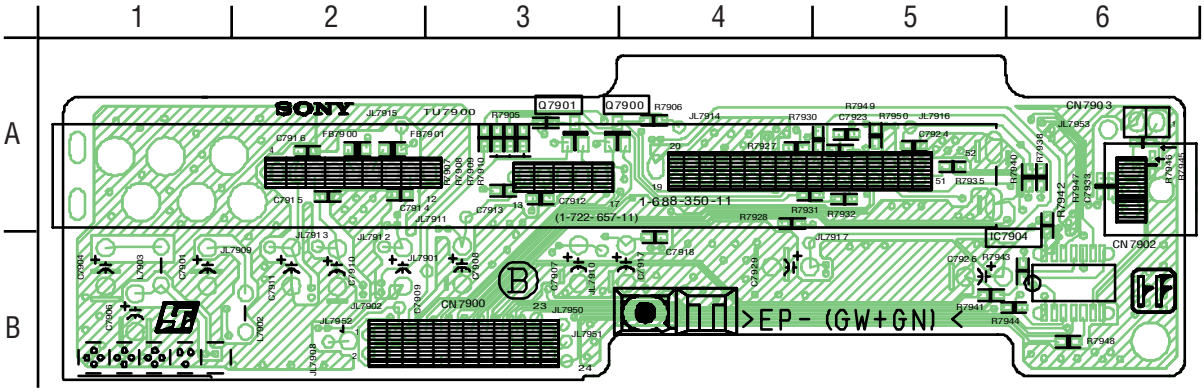

4-6. IC BLOCK DIAGRAMS

- **U (1/3) BOARD IC9402**
  CXA2171AQ

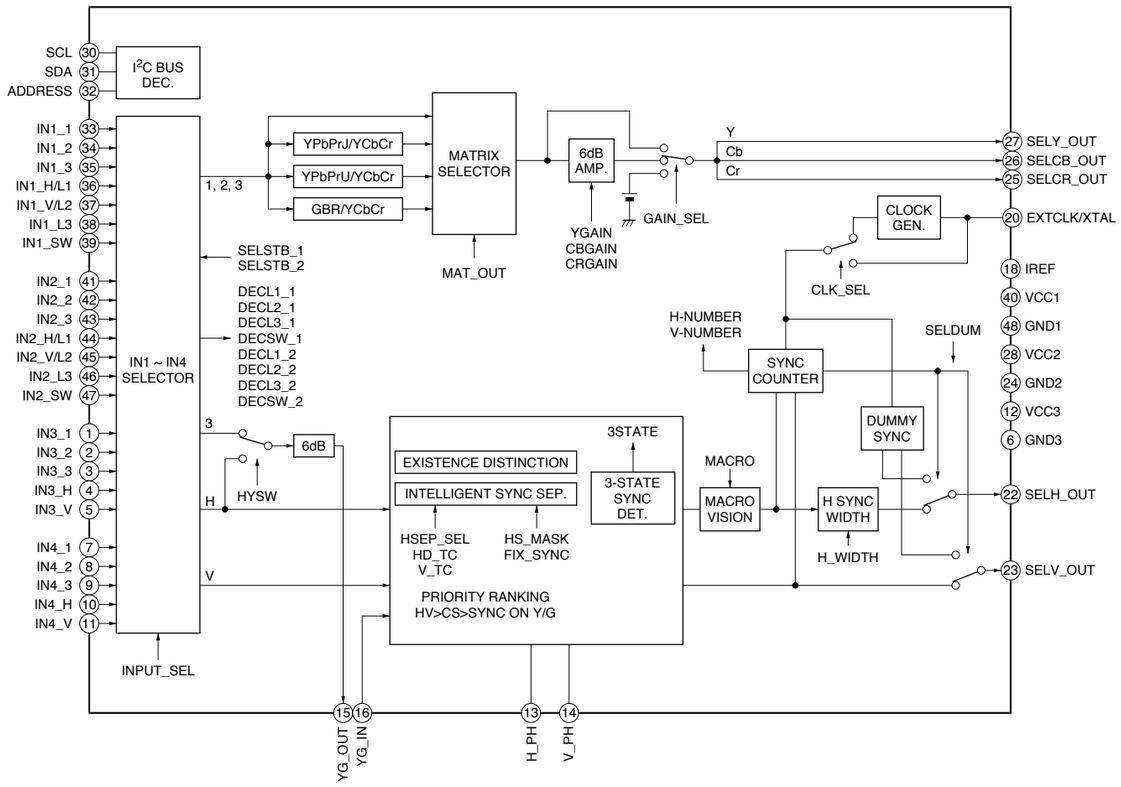

- **U (2/3) BOARD IC9400**
- **U (3/3) BOARD IC9401**
  CXA2069Q

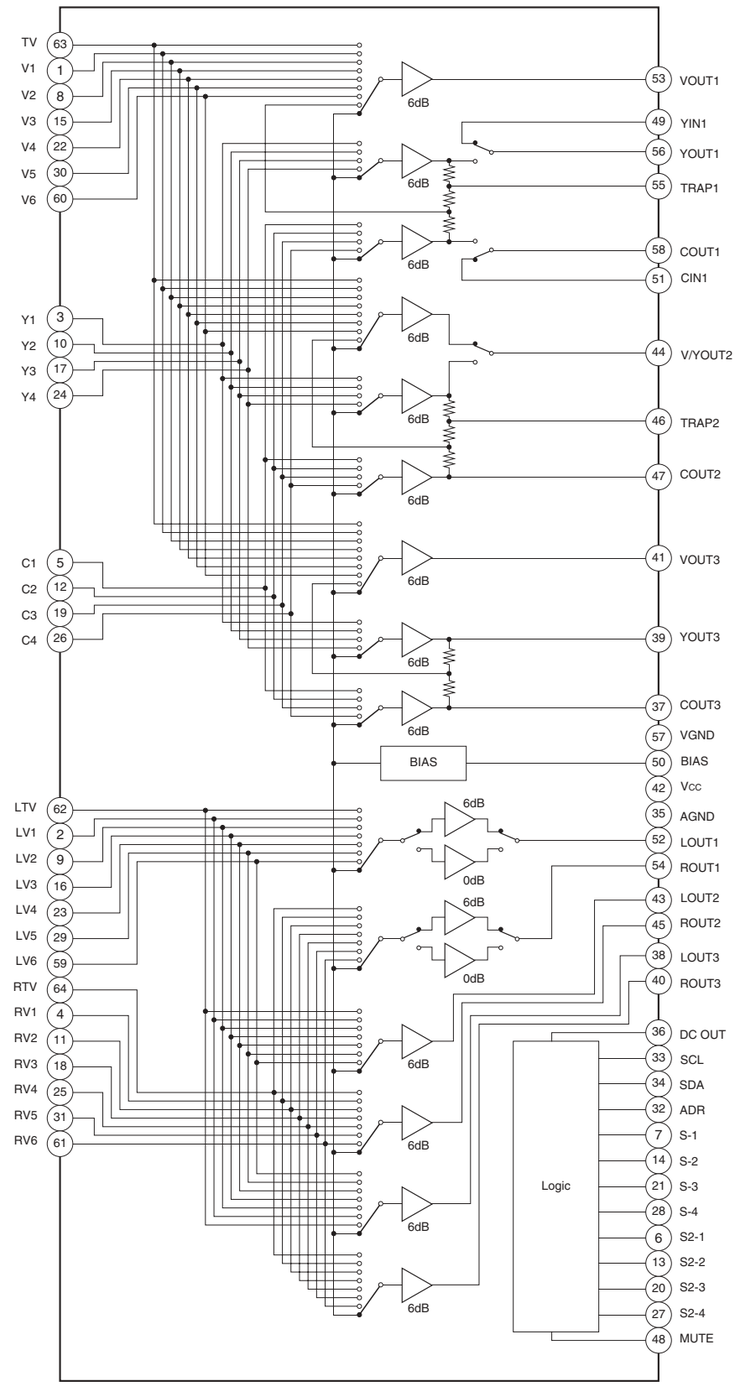

4-7. SEMICONDUCTORS

CXA1875AM-T4 C1S
SN65LVDT14PWR C1S

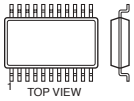

16Pin

CXA2069Q
NJW1149

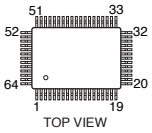

CXA2171AQ-T6

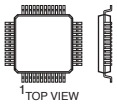

48Pin

LM75CIMX-5
M24C02-WMN6T(A)
M24C16-WMN6T(A)
MAX4451EKA-TG069
NJM4558V-TE2

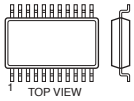

8Pin

M52055FP

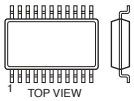

14Pin

MCZ3001DA

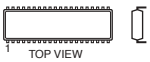

18Pin

NJM78M12DL1A-TE2

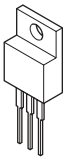

NJM79M12DL1A-TE1

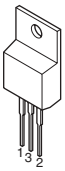

PQ07VZ012ZP

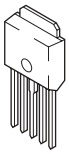

PQ30RV11
PQ30RV21
PQ30RV31

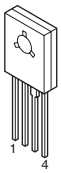

SN74CBTLV1G125DCKR

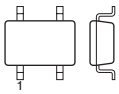

5Pin

TDA7265

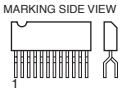

11Pin

TDA7296

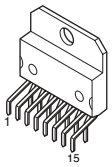

UPC1093J-1-T

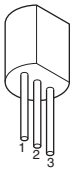

2SA1162-G
2SA1576A-T106-R
2SA1611-M5M6
2SC1623-L5L6
2SC4081-R
2SD601A-Q
DTA114EKA-T146
DTC114EK
DTC114EU
DTC143EKA-T146
DTC144EKA
DTC144EUA-T146

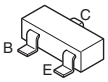

2SK2663

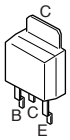

D10SC6M

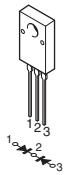

D1N20R
D1NS4
RD12SB2
RD18SB2
RD3.3SB2

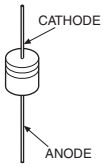

D1NL20J-TR

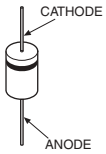

D2SB60A-F04
D4SBL40
D4SBS6-F
D6SB60L

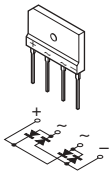

DAP202K
M1MA152WK-T1

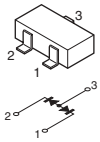

DE5SC3ML

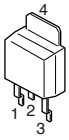

DTZ10B
HZU11B1TRF
MA111-TX
MA113-(TX)
UDZS-TE17-5.6B
UDZ-TE-17-4.3B
UDZ-TE-17-8.2B

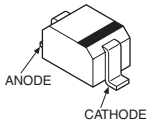

ERA22-08
ERC04-06SE

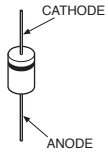

RD5.6SB2-T1
RD6.2SB2-T1
RD7.5SB2-T1

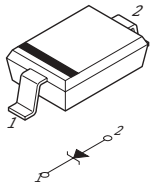

SLR-325VCT31

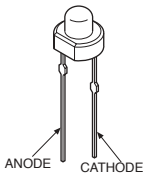

SECTION 5
EXPLODED VIEWS

NOTE:

- Items with no part number and no description are not stocked because they are seldom required for routine service
- The construction parts of an assembled part are indicated with a collation number in the remark column.
- Items marked " * " are not stocked since they are seldom required for routine service. Some delay should be anticipated when ordering these items.

The components identified by shading and mark ⚠ are critical for safety.
Replace only with part number specified.

Les composants identifies par une trame et une marque ⚠ sont critiques pour la securite.
Ne les remplacer que par une piece portant le numero specifie.

1. CONTROL BLOCK, REAR COVER

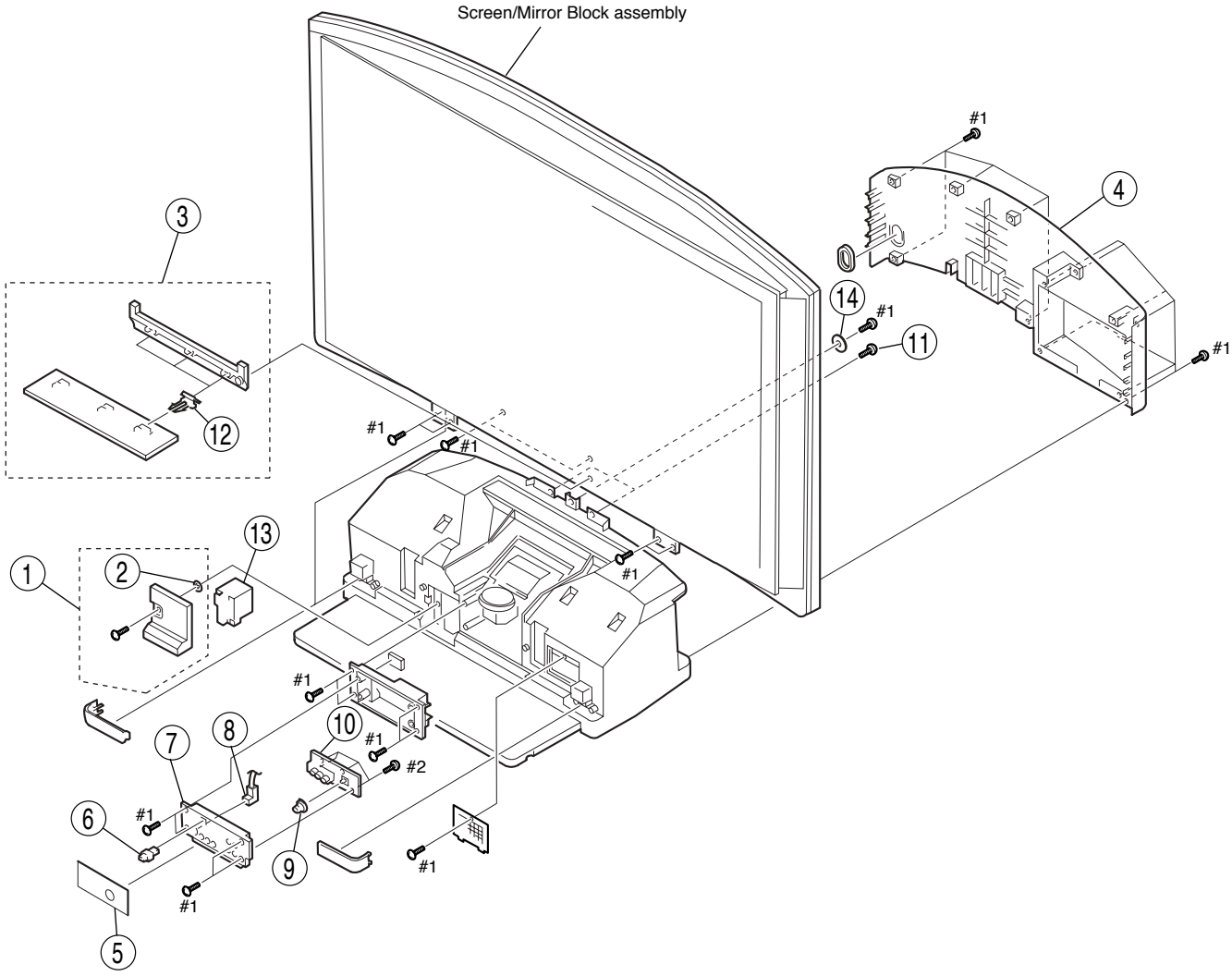

REF. NO.	PART NO.	DESCRIPTION	REMARK
1	* X-4042-246-1	DOOR ASSY, LAMP	
2	* 3-650-537-00	WASHER	
3	X-4042-247-1	DOOR ASSY, CONTROL	
4	* X-4042-245-1	COVER ASSY, REAR	
5	* 4-097-519-01	LABEL, CONTROL	
6	4-042-192-01	CATCHER, PUSH	
7	* 4-097-497-01	PANEL, CONTROL	
8	1-828-023-11	CORD WITH CONNECTOR (I-LINK)	
9	* 4-097-498-01	COVER, JOY STICK	
10	* A-1405-690-A	H3 BOARD, COMPLETE	
11	4-098-529-01	SCREW, IDETITE 4X16 +HEX	
12	4-045-250-11	DAMPER	
13	⚠* A-1606-034-A	LAMPBLOCK (RP) ASSY	
14	4-098-531-01	WASHER 4X25	
#1	7-685-663-79	SCREW +BVTP 4X16 TYPE2 IT-3	
#2	7-685-648-79	SCREW +BVTP 3X12 TYPE2 IT-3	

2. CHASSIS-1

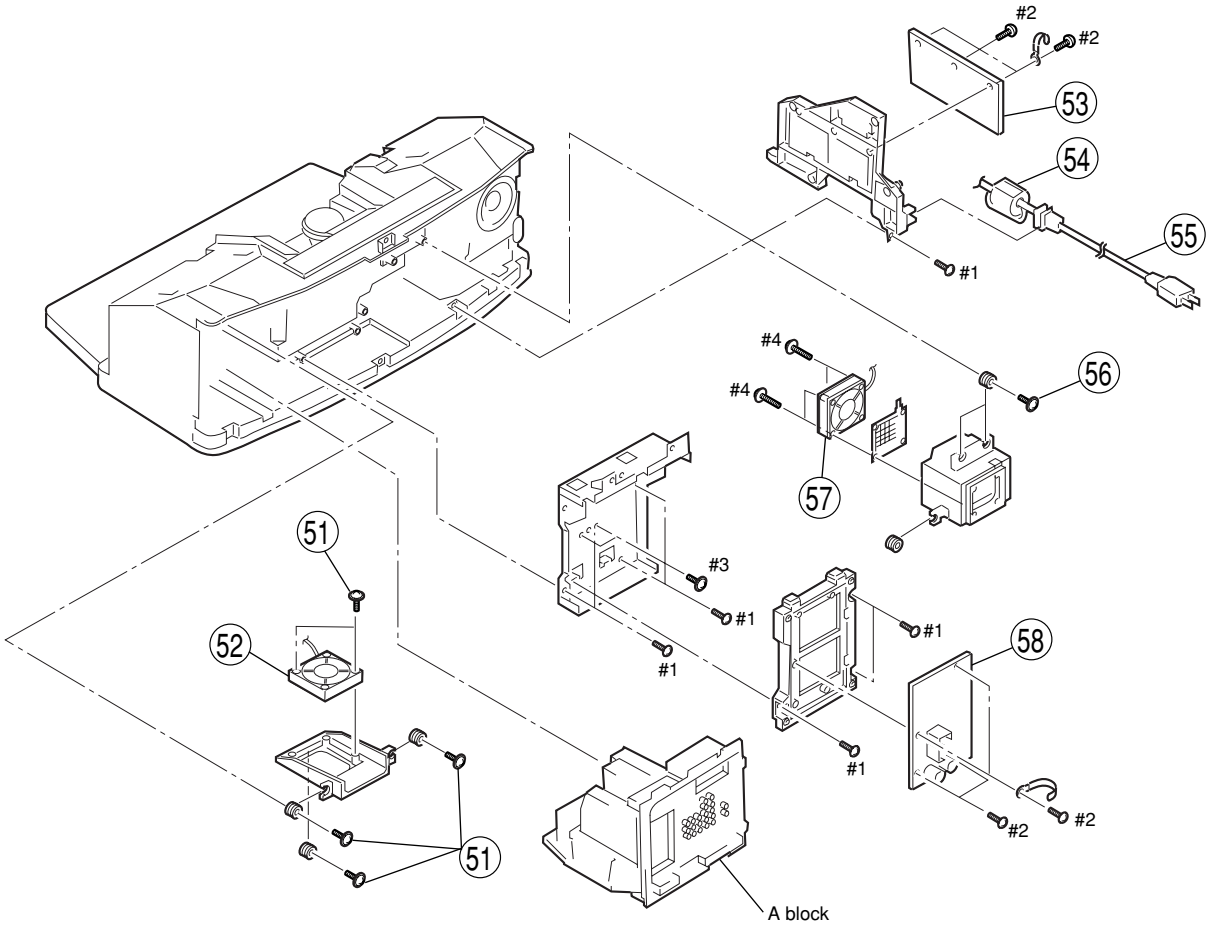

REF. NO.	PART NO.	DESCRIPTION	REMARK
51	4-302-404-03	SCREW (WASHER HEAD) (+P 4X16)	
52	* 1-787-081-11	FAN, DC	
53	* A-1302-364-A	F BOARD, COMPLETE	
54	1-500-824-11	FERRITE CORE	
55	⚠ 1-791-192-13	CORD, NOISE FILTER WITH POWER	
56	4-314-843-02	SCREW, TAPPING, +4X12	
57	1-787-057-11	D.C. FAN	
58	* A-1302-365-A	G1 BOARD, COMPLETE	
#1	7-685-663-79	SCREW +BVTP 4X16 TYPE2 IT-3	
#2	7-685-648-79	SCREW +BVTP 3X12 TYPE2 IT-3	
#3	7-682-948-01	SCREW +PSW 3X8	
#4	7-685-167-19	SCREW (WASHER HEAD) (+P 4X35)	

3. CHASSIS-2

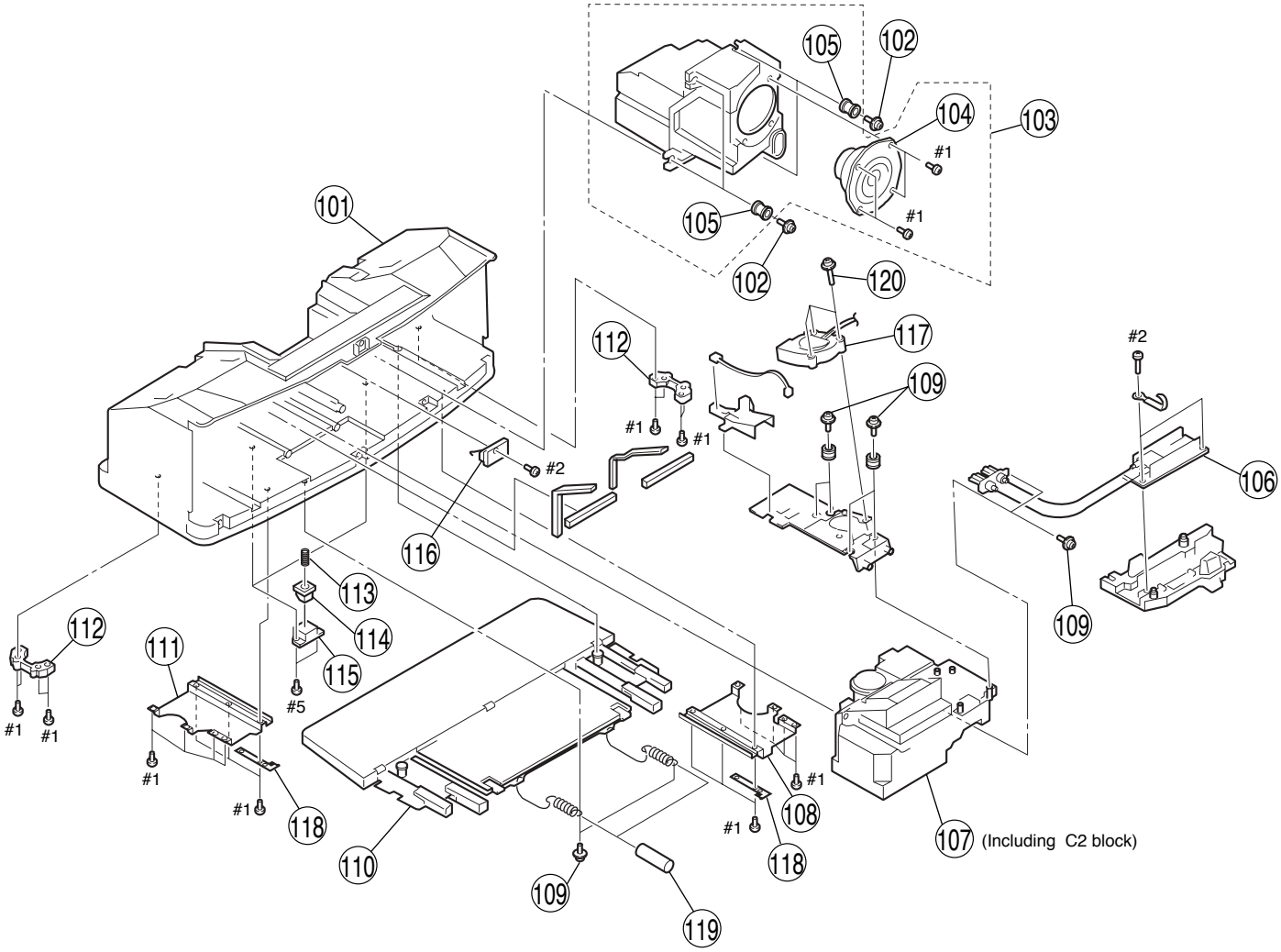

REF. NO.		PART NO.	DESCRIPTION	REMARK
101	*	X-4042-252-1	CABINET ASSY, BOTTOM	
102		4-064-929-02	SCREW, TP+TWH 4X25	
103	*	A-1604-836-A	WOOFER BLOCK ASSY	104, 105
104		1-825-620-11	LOUDSPEAKER (15cm)	
105		4-374-745-11	CUSHION (A)	
106	⚠	1-468-798-11	POWER SUPPLY BLOCK	
107	⚠*	A-1606-039-A	OPTICAL UNIT BLOCK ASSY (70XBR950)	
107	⚠*	A-1606-041-A	OPTICAL UNIT BLOCK ASSY (60XBR950)	
108	*	4-098-575-01	PLATE (FL), PEDESTAL LOCK	
109		4-302-404-03	SCREW (WASHER HEAD) (+P 4X16)	
110	*	A-1606-087-A	PEDESTAL BLOCK ASSY	
111	*	4-098-574-01	PLATE (FR), PEDESTAL LOCK	
112	*	4-097-517-01	HANG	
113	*	4-098-573-01	SPRING (2)	
114	*	4-097-516-01	SUPPORT, PEDESTAL LOCK	
115	*	4-097-515-01	CASE, PEDESTAL LOCK SUPPORT	
116	*	A-1405-689-A	T BOARD, COMPLETE	
117		1-418-257-11	FAN UNIT, DC	
118		4-099-086-01	PEDSTAL LOCK BRACKET	
119		4-100-288-01	GUIDE, SPRING	
120		4-097-089-01	+PX40 WASER HEAD TAPPING	
#1		7-685-663-79	SCREW +BVTP 4X16 TYPE2 IT-3	
#2		7-685-648-79	SCREW +BVTP 3X12 TYPE2 IT-3	
#5		7-685-261-14	SCREW +KTP 4X12 TYPE2 NON-SLIT	

4. A BLOCK-1

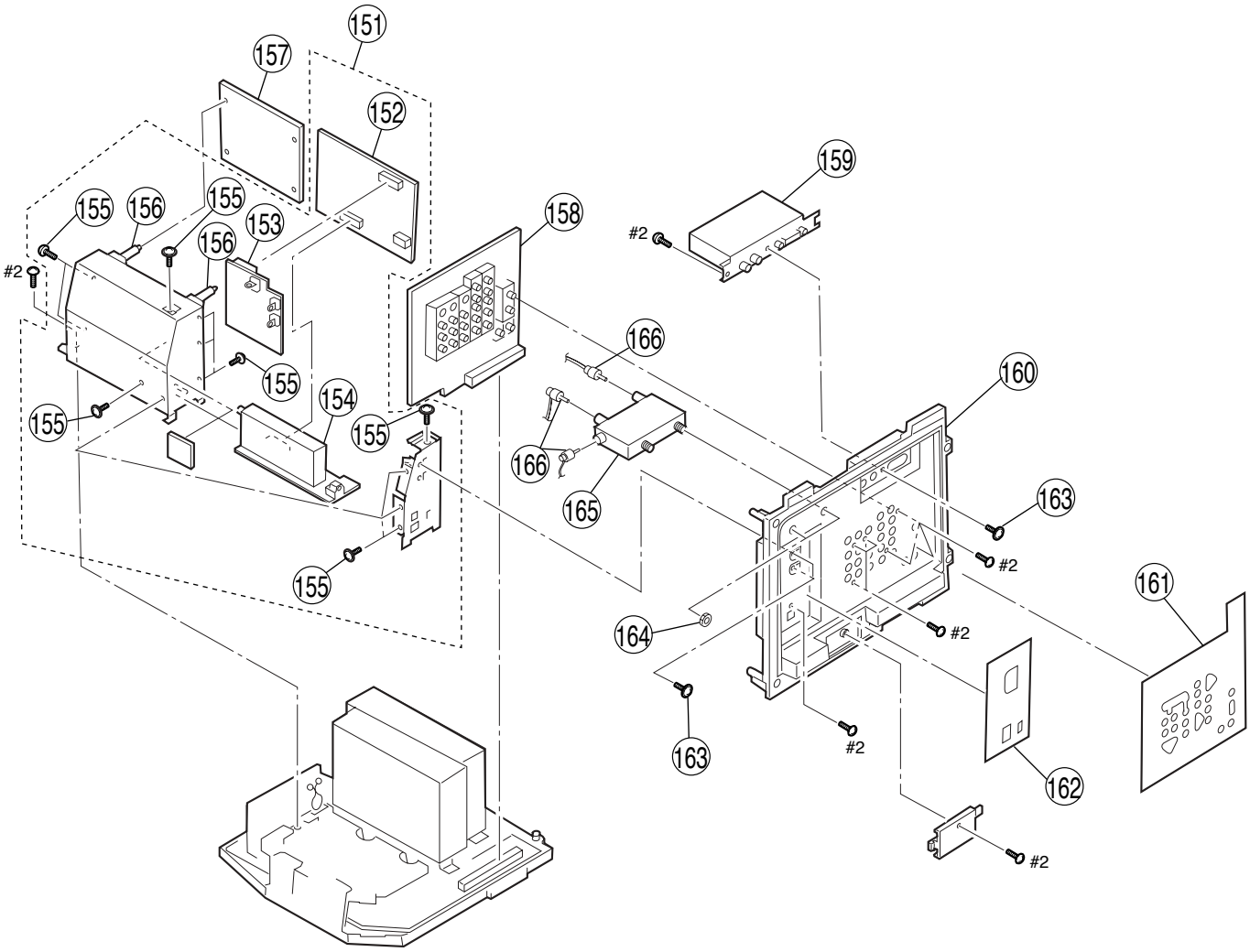

If it is detemined that the Q box Assembly has malfunctioned it must be replaced as a Complete Assembly. The boards within this assembly, QI, QM, and QT, are not field repairable.The following data is for reference only.

REF. NO.	PART NO.	DESCRIPTION	REMARK
151	* A-1606-037-B	Q BOX ASSY	152-154
152	* A-1302-554-A	QM BOARD, COMPLETE	
153	* A-1302-164-B	QI BOARD, COMPLETE	
154	* A-1302-541-A	QT BOARD, COMPLETE	
155	4-034-937-41	SCREW (M3), TAPPING	
156	4-385-948-41	HOLDER, PWB	
157	* A-1410-465-A	G2 BOARD, COMPLETE	
158	* A-1302-270-A	U BOARD, COMPLETE	
159	* A-1604-652-A	UD BLOCK	
160	* 4-097-480-01	TERMINAL BOARD	
161	* 4-097-369-01	LABEL, TERMINAL	
162	* 4-097-370-01	LABEL (DIGITAL), TERMINAL	
163	4-382-854-01	SCREW (M3X8), P, SW (+)	
164	3-682-691-00	NUT, WASHER HEXAGON	
165	1-786-183-13	SWITCH, ANTENNA	
166	* 1-557-056-31	CABLE, P-P	
#2	7-685-648-79	SCREW +BVTP 3X12 TYPE2 IT-3	

5. A BLOCK-2

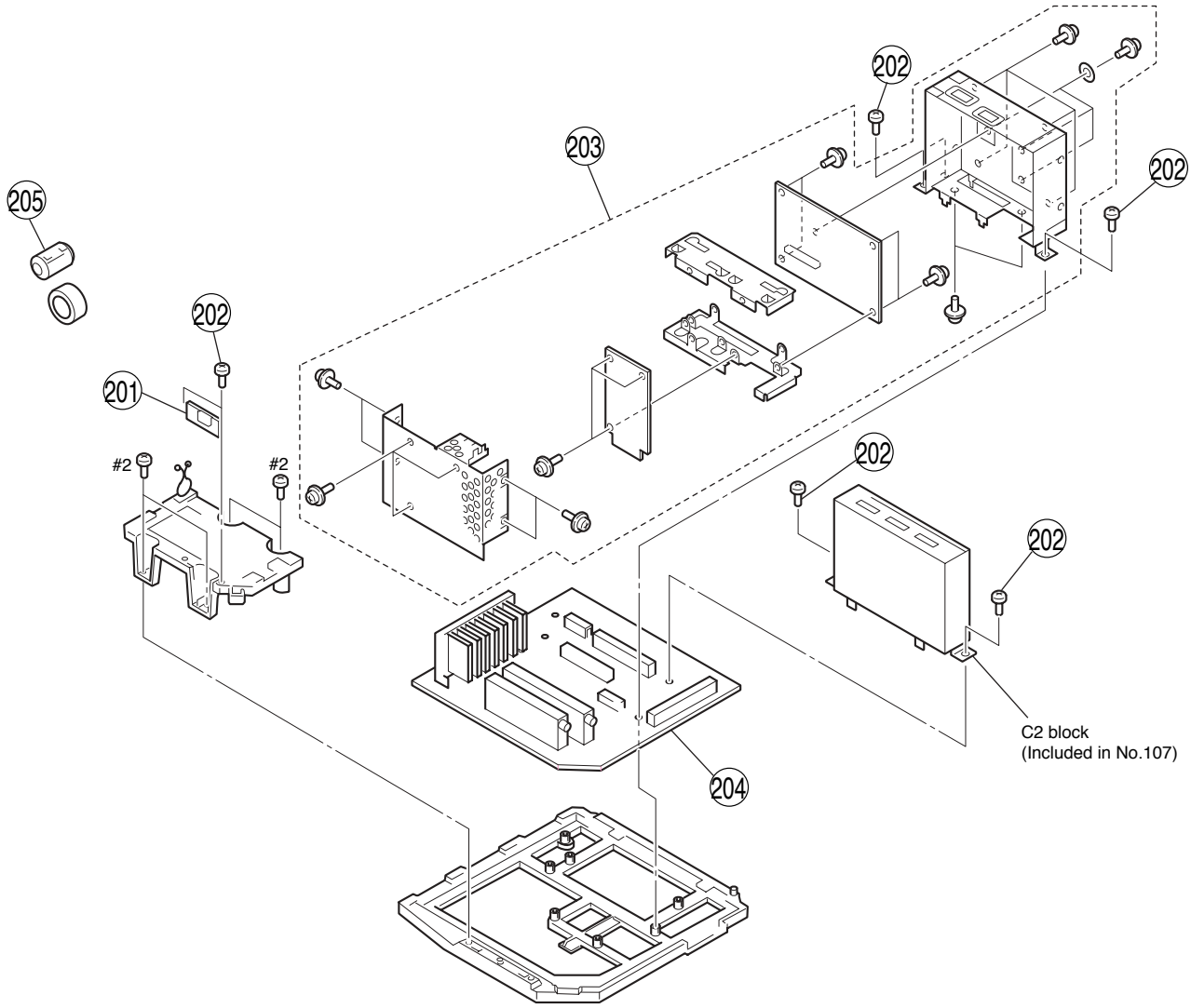

REF. NO.		PART NO.	DESCRIPTION	REMARK
201	*	A-1410-240-A	H4 BOARD, COMPLETE	
202		4-029-432-01	SCREW (3X12), (+) BVWHTP	
203	*	A-1605-991-A	DIC BLOCK COMPL ASSY	(70XBR950)
203	*	A-1606-015-A	DIC BLOCK COMPL ASSY	(60XBR950)
204	*	A-1302-366-A	A BOARD, COMPLETE	
205		1-469-241-11	CORE, FERRITE (RFC-8 BK)	
#2		7-685-648-79	SCREW +BVTP 3X12 TYPE2 IT-3	

6. SCREEN, MIRROR BLOCK ASSEMBLY

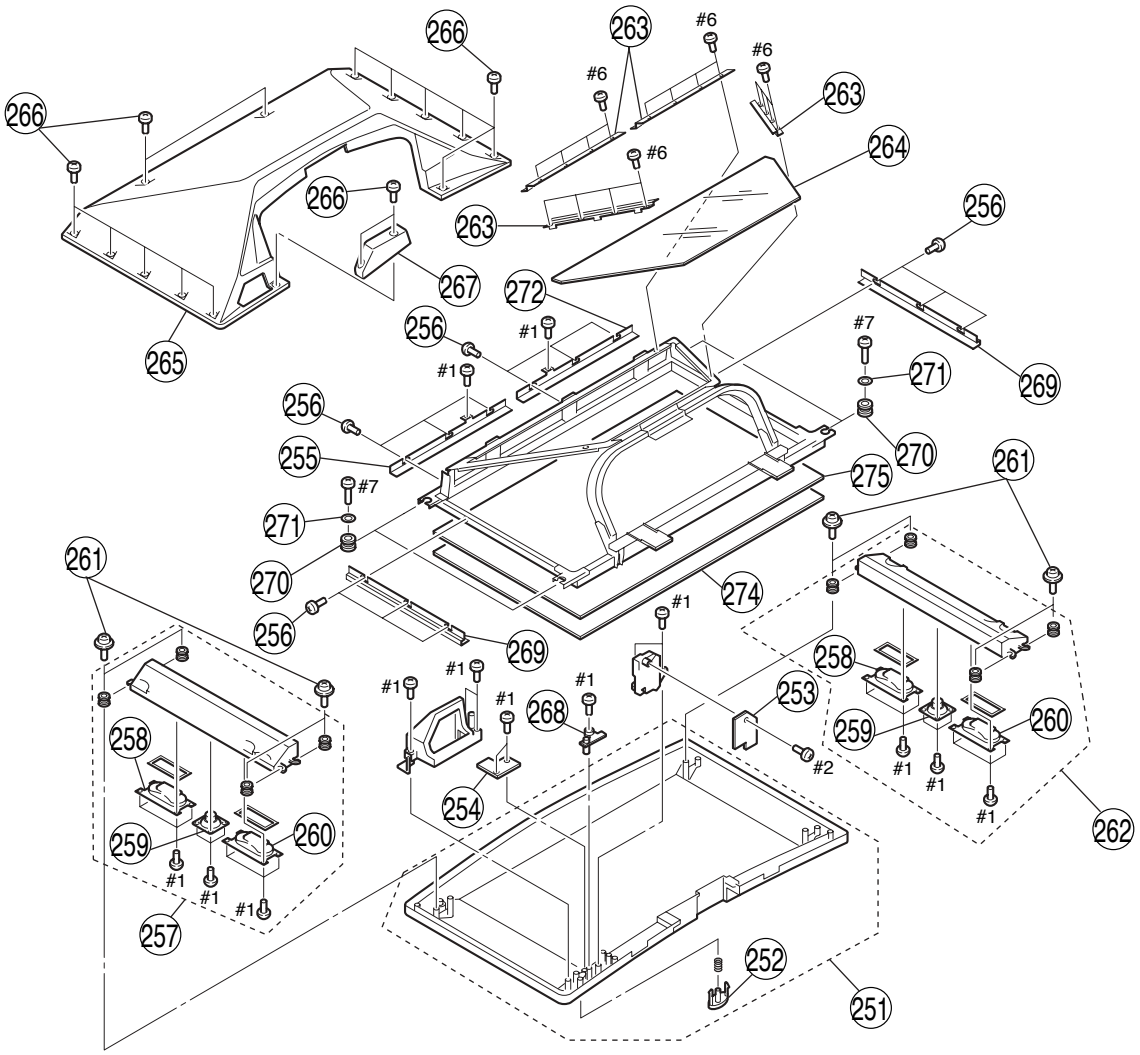

REF. NO.	PART NO.	DESCRIPTION	REMARK
251	* A-1605-989-A	FRAME BLOCK ASSY, SCREEN(70XBR950)	
251	* A-1606-013-A	FRAME BLOCK ASSY, SCREEN(60XBR950)	
252	* X-4042-383-1	BUTTON, ASSY POWER	
253	* A-1302-165-A	QH BOARD, COMPLETE	
254	* A-1405-691-A	H1 BOARD, COMPLETE	
255	* 4-098-533-01	HOLDER (TOP) (R), SCREEN	
256	4-098-529-01	SCREW, IDETITE 4X16 +HEX	
257	* A-1604-868-A	SPEAKER BLOCK (R) ASSY	258-260
258	1-825-621-11	LOUDSPEAKER (13X7cm)	
259	1-825-619-11	LOUDSPEAKER (5cm)	
260	1-825-622-11	LOUDSPEAKER (13X7cm)	
261	4-302-404-03	SCREW (WASHER HEAD) (+P 4X16)	
262	* A-1604-847-A	SPEAKER BLOCK (L) ASSY	258-260
263	* 4-098-534-01	HOLDER (L), MIRROR	
264	* 4-098-536-01	MIRROR (70XBR) (70XBR950)	
264	* 4-098-589-01	MIRROR (60XBR)	
265	* X-4042-242-1	COVER (70) ASSY, MIRROR (70XBR950)	
265	* X-4042-258-1	COVER (60) ASSY, MIRROR (60XBR950)	

REF. NO.	PART NO.	DESCRIPTION	REMARK
266	4-302-404-11	SCREW (WASHER HEAD) (+P 4X16)	
267	* 4-097-505-01	COVER (70), MS (70XBR950)	
267	* 4-097-506-01	COVER (60), MS (60XBR950)	
268	4-097-502-01	FILTER, REMOTE	
269	* 4-098-537-01	HOLDER (SIDE), SCREEN	
270	4-098-532-01	SCREEN FRAME BUSH	
271	4-098-531-01	WASHER 4X25	
272	* 4-098-535-01	HOLDER (TOP) (L), SCREEN	
273	* 4-098-530-01	HOLDER (S), MIRROR	
274	4-098-276-11	PLATE (60L), DIFFUSION	
274	4-098-273-11	PLATE (70L), DIFFUSION	
275	4-098-277-11	PLATE (60F), DIFFUSION	
275	4-098-274-11	PLATE (70F), DIFFUSION	
#1	7-685-663-79	SCREW +BVTP 4X16 TYPE2 IT-3	
#2	7-685-648-79	SCREW +BVTP 3X12 TYPE2 IT-3	
#6	7-685-646-79	SCREW +BVTP 3X8 TYPE2 IT-3	
#7	7-685-665-71	SCREW +BVTP 4X25 TYPE2 IT-3	

SECTION 6
ELECTRICAL PARTS LIST

The components identified by shading and mark ⚠ are critial for safety.
Replace only with part number specified.

Les composants identifies par une trame et une marque ⚠ sont critiques pour la securite.
Ne les remplacer que par une piece portant le numero specifie.

When indicating parts by reference number, please include the board name.

- Items marked " * " are not stocked since they are seldom required for routine service. Some delay should be anticipated when ordering these items.
- All variable and adjustable resistors have characteristic curve B, unless otherwise noted.
- RESISTORS
  All resistors are in ohms
  F : nonflammable
- CAPACITORS
  PF : μμF
- There are some cases the reference number on one board overlaps on the other board. Therefore, when ordering parts by the reference number, please include the board name.

REF. NO.	PART NO.	DESCRIPTION			REMARK
*	A-1302-366-A	A BOARD, COMPLETE			
		**********			
	4-382-854-01	SCREW (M3X8), P, SW (+)			
		< CAPACITOR >			
C8001	1-126-947-11	ELECT	47μF	20%	35V
C8002	1-164-156-11	CERAMIC CHIP	0.1μF		25V
C8006	1-135-960-91	CERAMIC CHIP	10μF	10%	25V
C8007	1-164-360-11	CERAMIC CHIP	0.1μF		16V
C8008	1-126-947-11	ELECT	47μF	20%	35V
C8009	1-126-947-11	ELECT	47μF	20%	35V
C8012	1-164-156-11	CERAMIC CHIP	0.1μF		25V
C8013	1-164-156-11	CERAMIC CHIP	0.1μF		25V
C8014	1-126-964-11	ELECT	10μF	20%	50V
C8015	1-162-966-11	CERAMIC CHIP	0.0022μF	10%	50V
C8016	1-126-933-11	ELECT	100μF	20%	16V
C8017	1-126-964-11	ELECT	10μF	20%	50V
C8022	1-162-970-11	CERAMIC CHIP	0.01μF	10%	25V
C8023	1-162-966-11	CERAMIC CHIP	0.0022μF	10%	50V
C8024	1-126-933-11	ELECT	100μF	20%	16V
C8026	1-162-966-11	CERAMIC CHIP	0.0022μF	10%	50V
C8027	1-162-970-11	CERAMIC CHIP	0.01μF	10%	25V
C8028	1-126-964-11	ELECT	10μF	20%	50V
C8029	1-126-964-11	ELECT	10μF	20%	50V
C8030	1-126-967-11	ELECT	47μF	20%	50V
C8031	1-162-966-11	CERAMIC CHIP	0.0022μF	10%	50V
C8032	1-126-933-11	ELECT	100μF	20%	16V
C8033	1-162-966-11	CERAMIC CHIP	0.0022μF	10%	50V
C8034	1-162-966-11	CERAMIC CHIP	0.0022μF	10%	50V
C8035	1-126-933-11	ELECT	100μF	20%	16V
C8036	1-162-966-11	CERAMIC CHIP	0.0022μF	10%	50V
C8037	1-126-933-11	ELECT	100μF	20%	16V
C8038	1-126-935-11	ELECT	470μF	20%	16V
C8039	1-162-966-11	CERAMIC CHIP	0.0022μF	10%	50V
C8041	1-162-966-11	CERAMIC CHIP	0.0022μF	10%	50V
C8042	1-126-933-11	ELECT	100μF	20%	16V
C8047	1-126-947-11	ELECT	47μF	20%	35V
C8048	1-126-947-11	ELECT	47μF	20%	35V
C8049	1-164-156-11	CERAMIC CHIP	0.1μF		25V
C8050	1-126-947-11	ELECT	47μF	20%	35V
C8051	1-164-156-11	CERAMIC CHIP	0.1μF		25V
C8052	1-164-156-11	CERAMIC CHIP	0.1μF		25V
C8053	1-165-176-11	CERAMIC CHIP	0.047μF	10%	16V
C8054	1-115-156-11	CERAMIC CHIP	1μF		10V
C8055	1-162-961-11	CERAMIC CHIP	330pF	10%	50V
C8056	1-127-804-91	CERAMIC CHIP	100pF	1%	50V
C8057	1-165-176-11	CERAMIC CHIP	0.047μF	10%	16V
C8058	1-115-156-11	CERAMIC CHIP	1μF		10V
C8059	1-164-230-11	CERAMIC CHIP	220pF	5%	50V
C8061	1-126-933-11	ELECT	100μF	20%	16V
C8062	1-126-947-11	ELECT	47μF	20%	35V
C8063	1-164-156-11	CERAMIC CHIP	0.1μF		25V
C8064	1-126-937-11	ELECT	4700μF	20%	16V
C8065	1-126-947-11	ELECT	47μF	20%	35V
C8066	1-164-156-11	CERAMIC CHIP	0.1μF		25V
C8067	1-164-156-11	CERAMIC CHIP	0.1μF		25V
C8077	1-126-964-11	ELECT	10μF	20%	50V
C8080	1-115-467-11	CERAMIC CHIP	0.22μF	10%	10V
C8082	1-126-947-11	ELECT	47μF	20%	35V
C8083	1-164-156-11	CERAMIC CHIP	0.1μF		25V
C8084	1-126-947-11	ELECT	47μF	20%	35V
C8085	1-164-156-11	CERAMIC CHIP	0.1μF		25V
C8086	1-164-156-11	CERAMIC CHIP	0.1μF		25V
C8087	1-164-156-11	CERAMIC CHIP	0.1μF		25V
C8088	1-164-156-11	CERAMIC CHIP	0.1μF		25V
C8089	1-135-960-91	CERAMIC CHIP	10μF	10%	25V
C8090	1-164-156-11	CERAMIC CHIP	0.1μF		25V
C8091	1-164-156-11	CERAMIC CHIP	0.1μF		25V
C8092	1-126-933-11	ELECT	100μF	20%	16V
C8095	1-104-665-11	ELECT	100μF	20%	25V
C8096	1-126-767-11	ELECT	1000μF	20%	16V
C8097	1-107-826-11	CERAMIC CHIP	0.1μF	10%	16V
C8500	1-126-964-11	ELECT	10μF	20%	50V
C8501	1-126-964-11	ELECT	10μF	20%	50V
C8502	1-126-947-11	ELECT	47μF	20%	35V
C8503	1-126-947-11	ELECT	47μF	20%	35V
C8504	1-126-934-11	ELECT	220μF	20%	16V
C8505	1-162-970-11	CERAMIC CHIP	0.01μF	10%	25V
C8506	1-130-495-00	MYLAR	0.1μF	5%	50V
C8507	1-130-495-00	MYLAR	0.1μF	5%	50V
C8508	1-107-826-11	CERAMIC CHIP	0.1μF	10%	16V
C8509	1-107-826-11	CERAMIC CHIP	0.1μF	10%	16V
C8510	1-107-826-11	CERAMIC CHIP	0.1μF	10%	16V
C8511	1-137-372-11	MYLAR	0.022μF	5%	50V
C8512	1-137-372-11	MYLAR	0.022μF	5%	50V
C8513	1-137-374-11	MYLAR	0.047μF	5%	50V
C8514	1-137-374-11	MYLAR	0.047μF	5%	50V
C8515	1-137-378-11	MYLAR	0.22μF	5%	50V
C8516	1-137-378-11	MYLAR	0.22μF	5%	50V
C8517	1-126-963-11	ELECT	4.7μF	20%	50V
C8518	1-126-963-11	ELECT	4.7μF	20%	50V
C8519	1-137-378-11	MYLAR	0.22μF	5%	50V
C8520	1-137-378-11	MYLAR	0.22μF	5%	50V
C8521	1-136-175-00	FILM	0.68μF	5%	50V
C8522	1-136-357-11	MYLAR	680pF	5%	100V

REF. NO.	PART NO.	DESCRIPTION			REMARK
C8525	1-130-495-00	MYLAR	0.1μF	5%	50V
C8526	1-110-563-11	CERAMIC CHIP	0.068μF	10%	16V
C8527	1-164-172-11	CERAMIC CHIP	0.0056μF	10%	25V
C8528	1-136-357-11	MYLAR	680pF	5%	100V
C8529	1-130-495-00	MYLAR	0.1μF	5%	50V
C8530	1-130-495-00	MYLAR	0.1μF	5%	50V
C8531	1-162-963-11	CERAMIC CHIP	680pF	10%	50V
C8532	1-162-967-11	CERAMIC CHIP	0.0033μF	10%	50V
C8535	1-130-495-00	MYLAR	0.1μF	5%	50V
C8536	1-162-970-11	CERAMIC CHIP	0.01μF	10%	25V
C8537	1-162-967-11	CERAMIC CHIP	0.0033μF	10%	50V
C8538	1-164-227-11	CERAMIC CHIP	0.022μF	10%	25V
C8539	1-128-551-11	ELECT	22μF	20%	63V
C8540	1-164-227-11	CERAMIC CHIP	0.022μF	10%	25V
C8542	1-162-970-11	CERAMIC CHIP	0.01μF	10%	25V
C8543	1-126-947-11	ELECT	47μF	20%	35V
C8545	1-162-968-11	CERAMIC CHIP	0.0047μF	10%	50V
C8546	1-162-963-11	CERAMIC CHIP	680pF	10%	50V
C8547	1-162-967-11	CERAMIC CHIP	0.0033μF	10%	50V
C8549	1-128-551-11	ELECT	22μF	20%	63V
C8552	1-126-947-11	ELECT	47μF	20%	35V
C8553	1-126-933-11	ELECT	100μF	20%	16V
C8555	1-162-970-11	CERAMIC CHIP	0.01μF	10%	25V
C8556	1-162-970-11	CERAMIC CHIP	0.01μF	10%	25V
C8557	1-162-970-11	CERAMIC CHIP	0.01μF	10%	25V
C8560	1-126-933-11	ELECT	100μF	20%	16V
C8562	1-162-970-11	CERAMIC CHIP	0.01μF	10%	25V
C8563	1-107-826-11	CERAMIC CHIP	0.1μF	10%	16V
C8566	1-126-791-11	ELECT	10μF	20%	35V
C8568	1-126-791-11	ELECT	10μF	20%	35V
C8569	1-162-970-11	CERAMIC CHIP	0.01μF	10%	25V
C8570	1-127-715-91	CERAMIC CHIP	0.22μF	10%	16V
C8571	1-127-715-91	CERAMIC CHIP	0.22μF	10%	16V
C8572	1-162-968-11	CERAMIC CHIP	0.0047μF	10%	50V
C8573	1-127-715-91	CERAMIC CHIP	0.22μF	10%	16V
C8574	1-127-715-91	CERAMIC CHIP	0.22μF	10%	16V
C8575	1-127-715-91	CERAMIC CHIP	0.22μF	10%	16V
C8576	1-127-715-91	CERAMIC CHIP	0.22μF	10%	16V
C8577	1-162-968-11	CERAMIC CHIP	0.0047μF	10%	50V
C8578	1-162-970-11	CERAMIC CHIP	0.01μF	10%	25V
C8579	1-127-715-91	CERAMIC CHIP	0.22μF	10%	16V
C8580	1-162-968-11	CERAMIC CHIP	0.0047μF	10%	50V
C8581	1-127-715-91	CERAMIC CHIP	0.22μF	10%	16V
C8582	1-162-970-11	CERAMIC CHIP	0.01μF	10%	25V
C8583	1-162-968-11	CERAMIC CHIP	0.0047μF	10%	50V
C8584	1-162-968-11	CERAMIC CHIP	0.0047μF	10%	50V
C8585	1-126-964-11	ELECT	10μF	20%	50V
C8586	1-126-964-11	ELECT	10μF	20%	50V
C8587	1-126-965-91	ELECT	22μF	20%	50V
C8588	1-126-968-11	ELECT	100μF	20%	50V
C8589	1-126-960-11	ELECT	1μF	20%	50V
C8590	1-126-965-91	ELECT	22μF	20%	50V
C8591	1-126-960-11	ELECT	1μF	20%	50V
C8592	1-127-734-51	ELECT	4700μF	20%	35V
C8593	1-164-156-11	CERAMIC CHIP	0.1μF		25V
C8594	1-164-227-11	CERAMIC CHIP	0.022μF	10%	25V
C8595	1-126-965-91	ELECT	22μF	20%	50V
C8596	1-130-477-00	MYLAR	0.0033μF	20%	50V
C8597	1-115-339-11	CERAMIC CHIP	0.1μF	10%	50V
C8598	1-126-960-11	ELECT	1μF	20%	50V
C8599	1-136-153-00	FILM	0.01μF	5%	50V
C8600	1-130-477-00	MYLAR	0.0033μF	5%	50V
C8601	1-136-155-00	FILM	0.015μF	5%	50V

REF. NO.	PART NO.	DESCRIPTION			REMARK
C8602	1-127-734-51	ELECT	4700μF	20%	35V
C8603	1-164-156-11	CERAMIC CHIP	0.1μF		25V
C8604	1-136-153-00	FILM	0.01μF	5%	50V
C8605	1-136-171-00	FILM	0.33μF	5%	50V
C8606	1-136-155-00	FILM	0.015μF	5%	50V
C8607	1-136-171-00	FILM	0.33μF	5%	50V
C8608	1-127-715-91	CERAMIC CHIP	0.22μF	10%	16V
C8610	1-126-960-11	ELECT	1μF	20%	50V
C8611	1-128-934-91	CERAMIC CHIP	0.33μF	20%	10V
C8612	1-126-960-11	ELECT	1μF	20%	50V
C8613	1-126-960-11	ELECT	1μF	20%	50V
C8614	1-126-963-11	ELECT	4.7μF	20%	50V
C8615	1-126-960-11	ELECT	1μF	20%	50V
C8616	1-126-960-11	ELECT	1μF	20%	50V
C8617	1-126-960-11	ELECT	1μF	20%	50V
C8618	1-107-826-11	CERAMIC CHIP	0.1μF	10%	16V
C8619	1-126-959-11	ELECT	0.47μF	20%	50V
C8620	1-115-339-11	CERAMIC CHIP	0.1μF	10%	50V
C8621	1-126-968-11	ELECT	100μF	20%	50V
C8623	1-127-722-91	ELECT	2200μF	20%	16V
C8624	1-126-968-11	ELECT	100μF	20%	50V
C8625	1-115-339-11	CERAMIC CHIP	0.1μF	10%	50V
C8626	1-126-959-11	ELECT	0.47μF	20%	50V
C8627	1-126-962-11	ELECT	3.3μF	20%	50V
C8629	1-136-165-00	FILM	0.1μF	5%	50V
C8630	1-136-165-00	FILM	0.1μF	5%	50V
C8632	1-107-703-11	ELECT	220μF	20%	25V
C8638	1-136-161-00	FILM	0.047μF	5%	50V
C8639	1-126-964-11	ELECT	10μF	20%	50V
C8641	1-136-161-00	FILM	0.047μF	5%	50V
C8642	1-126-964-11	ELECT	10μF	20%	50V
C8649	1-107-826-11	CERAMIC CHIP	0.1μF	10%	16V
C8650	1-126-933-11	ELECT	100μF	20%	16V
C8651	1-127-804-91	CERAMIC CHIP	100pF	1%	50V
C8653	1-126-935-11	ELECT	470μF	20%	16V
C8654	1-136-165-00	FILM	0.1μF	5%	50V
C8655	1-126-964-11	ELECT	10μF	20%	50V

< CONNECTOR >

*CN8001	1-564-506-11	PLUG, CONNECTOR 3P
*CN8002	1-564-511-11	PLUG, CONNECTOR 8P
*CN8003	1-564-510-11	PLUG, CONNECTOR 7P
*CN8005	1-564-507-11	PLUG, CONNECTOR 4P
*CN8006	1-564-509-11	PLUG, CONNECTOR 6P
*CN8008	1-793-922-11	CONNECTOR, DIN (RECEPTACLE)64P
*CN8009	1-778-391-11	SOCKET, PC CONNECTOR 96P
*CN8010	1-537-711-11	TAB, FASTEN (PCB)
CN8011	1-695-915-11	TAB (CONTACT)
CN8013	1-695-915-11	TAB (CONTACT)
CN8018	1-770-627-21	PIN, CONNECTOR 10P
*CN8019	1-573-296-21	CONNECTOR, BOARD TO BOARD 10P
*CN8020	1-764-812-12	CONNECTOR, BOARD TO BOARD 11P
*CN8021	1-564-510-11	PLUG, CONNECTOR 7P
*CN8023	1-564-511-11	PLUG, CONNECTOR 8P
*CN8024	1-564-506-11	PLUG, CONNECTOR 3P
CN8027	1-779-092-11	PIN, CONNECTOR (PC BOARD) 10P
*CN8028	1-766-177-11	PIN, CONNECTOR (PC BOARD) 9P
*CN8029	1-564-511-11	PLUG, CONNECTOR 8P
*CN8030	1-564-508-11	PLUG, CONNECTOR 5P
*CN8031	1-564-506-11	PLUG, CONNECTOR 3P
*CN8034	1-564-507-11	PLUG, CONNECTOR 4P
*CN8035	1-564-515-11	PLUG, CONNECTOR 12P

REF. NO.	PART NO.	DESCRIPTION	REMARK
*CN8036	1-537-738-21	TERMINAL, EARTH	
*CN8037	1-537-738-21	TERMINAL, EARTH	
*CN8038	1-537-738-21	TERMINAL, EARTH	
*CN8039	1-537-738-21	TERMINAL, EARTH	
*CN8040	1-537-738-21	TERMINAL, EARTH	
*CN8041	1-564-507-11	PLUG, CONNECTOR 4P	
*CN8043	1-537-711-11	TAB, FASTEN (PCB)	
CN8044	1-695-915-11	TAB (CONTACT)	
*CN8501	1-564-507-11	PLUG, CONNECTOR 4P	
*CN8502	1-564-507-11	PLUG, CONNECTOR 4P	
		< DIODE >	
D8001	1-216-864-11	SHORT CHIP 0	
D8003	8-719-404-50	DIODE MA111-TX	
D8004	8-719-404-50	DIODE MA111-TX	
D8008	8-719-404-50	DIODE MA111-TX	
D8009	8-719-404-50	DIODE MA111-TX	
D8010	8-719-404-50	DIODE MA111-TX	
D8023	8-719-158-02	DIODE RD3.9SB2	
D8026	8-719-404-50	DIODE MA111-TX	
D8027	8-719-404-50	DIODE MA111-TX	
D8029	8-719-404-50	DIODE MA111-TX	
D8030	8-719-056-78	DIODE UDZ-TE-17-4.3B	
D8033	8-719-404-50	DIODE MA111-TX	
D8034	8-719-404-50	DIODE MA111-TX	
D8035	8-719-404-50	DIODE MA111-TX	
D8037	8-719-404-50	DIODE MA111-TX	
D8038	8-719-404-50	DIODE MA111-TX	
D8039	8-719-404-50	DIODE MA111-TX	
D8040	8-719-404-50	DIODE MA111-TX	
D8500	8-719-071-74	DIODE HZU11B1TRF	
D8501	8-719-071-74	DIODE HZU11B1TRF	
D8502	8-719-050-38	DIODE M1MA152WK-T1	
D8503	8-719-050-37	DIODE M1MA152WA-T1	
D8505	8-719-404-50	DIODE MA111-TX	
D8506	8-719-404-50	DIODE MA111-TX	
D8507	8-719-404-50	DIODE MA111-TX	
D8508	8-719-404-50	DIODE MA111-TX	
D8509	8-719-404-50	DIODE MA111-TX	
D8510	8-719-404-50	DIODE MA111-TX	
D8511	8-719-404-50	DIODE MA111-TX	
		< FERRITE BEAD >	
FB8001	1-216-295-91	SHORT CHIP 0	
FB8003	1-414-228-11	FERRITE 0μH	
FB8004	1-216-295-91	SHORT CHIP 0	
FB8005	1-216-295-91	SHORT CHIP 0	
FB8006	1-216-295-91	SHORT CHIP 0	
FB8007	1-216-295-91	SHORT CHIP 0	
FB8008	1-216-295-91	SHORT CHIP 0	
FB8009	1-216-295-91	SHORT CHIP 0	
FB8010	1-216-295-91	SHORT CHIP 0	
FB8011	1-216-295-91	SHORT CHIP 0	
FB8012	1-414-233-22	FERRITE 0μH	
FB8013	1-414-233-22	FERRITE 0μH	
FB8014	1-414-233-22	FERRITE 0μH	
FB8015	1-414-233-22	FERRITE 0μH	
FB8016	1-414-921-11	FERRITE 0μH	
		< IC >	
IC8002	6-705-025-01	IC PQ20WZ1UJ00H	
IC8005	6-705-025-01	IC PQ20WZ1UJ00H	
IC8006	6-705-025-01	IC PQ20WZ1UJ00H	
IC8007	6-705-025-01	IC PQ20WZ1UJ00H	
IC8008	8-759-663-29	IC MM1476AF(TP)	
IC8009	6-705-025-01	IC PQ20WZ1UJ00H	
IC8010	8-752-072-94	IC CXA1875AM-T4	
IC8011	8-759-520-49	IC PQ30RV21	
IC8501	6-700-393-01	IC NJW1106FC2	
IC8502	8-759-578-49	IC NJM2370U10-TE2	
IC8503	6-702-716-01	IC NJW1149	
IC8504	8-759-584-38	IC TDA7296	
IC8505	8-759-190-89	IC TDA7265	
IC8507	8-759-278-58	IC NJM4558V-TE2	
		< COIL >	
L8001	1-414-857-11	INDUCTOR 100μH	
L8003	1-469-555-21	INDUCTOR 10μH	
L8004	1-414-857-11	INDUCTOR 100μH	
L8005	1-414-857-11	INDUCTOR 100μH	
L8006	1-414-856-11	INDUCTOR 10μH	
L8007	1-414-857-11	INDUCTOR 100μH	
L8008	1-414-857-11	INDUCTOR 100μH	
L8009	1-414-856-11	INDUCTOR 10μH	
L8010	1-469-555-21	INDUCTOR 10μH	
L8501	1-469-555-21	INDUCTOR 10μH	
L8503	1-414-187-11	INDUCTOR 47μH	
L8506	1-469-555-21	INDUCTOR 10μH	
		< TRANSISTOR >	
Q8006	8-729-422-33	TRANSISTOR 2SD601A-Q-TX	
Q8008	8-729-216-22	TRANSISTOR 2SA1162-G	
Q8009	8-729-422-33	TRANSISTOR 2SD601A-Q-TX	
Q8014	8-729-905-35	TRANSISTOR 2SC4081-R	
Q8015	8-729-026-53	TRANSISTOR 2SA1576A-T106-QR	
Q8016	8-729-905-35	TRANSISTOR 2SC4081-R	
Q8017	8-729-026-53	TRANSISTOR 2SA1576A-T106-QR	
Q8018	8-729-905-35	TRANSISTOR 2SC4081-R	
Q8019	8-729-422-33	TRANSISTOR 2SD601A-Q-TX	
Q8021	8-729-422-33	TRANSISTOR 2SD601A-Q-TX	
Q8022	8-729-026-53	TRANSISTOR 2SA1576A-T106-QR	
Q8023	8-729-422-33	TRANSISTOR 2SD601A-Q-TX	
Q8024	8-729-900-53	TRANSISTOR DTC114EKA-T146	
Q8025	8-729-422-33	TRANSISTOR 2SD601A-Q-TX	
Q8027	8-729-422-33	TRANSISTOR 2SD601A-Q-TX	
Q8029	8-729-216-22	TRANSISTOR 2SA1162-G	
Q8030	8-729-216-22	TRANSISTOR 2SA1162-G	
Q8034	8-729-422-33	TRANSISTOR 2SD601A-Q-TX	
Q8035	8-729-216-22	TRANSISTOR 2SA1162-G	
Q8036	8-729-422-33	TRANSISTOR 2SD601A-Q-TX	
Q8037	8-729-422-33	TRANSISTOR 2SD601A-Q-TX	
Q8038	8-729-422-33	TRANSISTOR 2SD601A-Q-TX	
Q8039	8-729-422-33	TRANSISTOR 2SD601A-Q-TX	
Q8041	8-729-216-22	TRANSISTOR 2SA1162-G	
Q8044	8-729-422-33	TRANSISTOR 2SD601A-Q-TX	
Q8045	8-729-422-33	TRANSISTOR 2SD601A-Q-TX	
Q8046	8-729-422-33	TRANSISTOR 2SD601A-Q-TX	
Q8047	8-729-216-22	TRANSISTOR 2SA1162-G	
Q8048	8-729-216-22	TRANSISTOR 2SA1162-G	
Q8049	8-729-216-22	TRANSISTOR 2SA1162-G	
Q8050	8-729-422-33	TRANSISTOR 2SD601A-Q-TX	
Q8051	8-729-216-22	TRANSISTOR 2SA1162-G	
Q8052	8-729-216-22	TRANSISTOR 2SA1162-G	

REF. NO.	PART NO.	DESCRIPTION			REMARK
Q8500	8-729-422-33	TRANSISTOR 2SD601A-Q-TX			
Q8501	8-729-422-33	TRANSISTOR 2SD601A-Q-TX			
Q8502	8-729-422-33	TRANSISTOR 2SD601A-Q-TX			
Q8505	8-729-422-33	TRANSISTOR 2SD601A-Q-TX			
Q8506	8-729-422-33	TRANSISTOR 2SD601A-Q-TX			
Q8507	8-729-216-22	TRANSISTOR 2SA1162-G			
Q8508	8-729-422-33	TRANSISTOR 2SD601A-Q-TX			
Q8509	8-729-422-33	TRANSISTOR 2SD601A-Q-TX			
Q8510	8-729-216-22	TRANSISTOR 2SA1162-G			
Q8511	8-729-027-55	TRANSISTOR DTC143EKA-T146			
Q8512	8-729-216-22	TRANSISTOR 2SA1162-G			
Q8513	8-729-422-33	TRANSISTOR 2SD601A-Q-TX			
		< RESISTOR >			
R8007	1-218-691-11	METAL CHIP	910	0.5%	1/10W
R8008	1-218-704-11	METAL CHIP	3.3K	0.5%	1/10W
R8009	1-216-833-11	METAL CHIP	10K	5%	1/10W
R8019	1-216-833-11	METAL CHIP	10K	5%	1/10W
R8020	1-216-833-11	METAL CHIP	10K	5%	1/10W
R8022	1-216-833-11	METAL CHIP	10K	5%	1/10W
R8025	1-216-833-11	METAL CHIP	10K	5%	1/10W
R8026	1-216-809-11	METAL CHIP	100	5%	1/10W
R8028	1-216-809-11	METAL CHIP	100	5%	1/10W
R8031	1-218-722-11	METAL CHIP	18K	0.5%	1/10W
R8034	1-216-651-11	METAL CHIP	1K	0.5%	1/10W
R8036	1-218-716-11	METAL CHIP	10K	0.5%	1/10W
R8038	1-216-845-11	METAL CHIP	100K	5%	1/10W
R8039	1-218-660-91	METAL CHIP	47	0.5%	1/10W
R8041	1-216-864-11	SHORT CHIP	0		
R8042	1-218-668-11	METAL CHIP	100	0.5%	1/10W
R8043	1-216-809-11	METAL CHIP	100	5%	1/10W
R8044	1-216-820-11	METAL CHIP	820	5%	1/10W
R8048	1-216-651-11	METAL CHIP	1K	0.5%	1/10W
R8050	1-218-660-91	METAL CHIP	47	0.5%	1/10W
R8055	1-216-809-11	METAL CHIP	100	5%	1/10W
R8056	1-218-668-11	METAL CHIP	100	0.5%	1/10W
R8057	1-216-839-11	METAL CHIP	33K	5%	1/10W
R8058	1-216-833-11	METAL CHIP	10K	5%	1/10W
R8060	1-216-864-11	SHORT CHIP	0		
R8061	1-216-827-11	METAL CHIP	3.3K	5%	1/10W
R8062	1-216-820-11	METAL CHIP	820	5%	1/10W
R8063	1-216-839-11	METAL CHIP	33K	5%	1/10W
R8064	1-216-651-11	METAL CHIP	1K	0.5%	1/10W
R8065	1-216-825-11	METAL CHIP	2.2K	5%	1/10W
R8066	1-216-864-11	SHORT CHIP	0		
R8067	1-216-809-11	METAL CHIP	100	5%	1/10W
R8068	1-216-809-11	METAL CHIP	100	5%	1/10W
R8070	1-216-825-11	METAL CHIP	2.2K	5%	1/10W
R8071	1-216-837-11	METAL CHIP	22K	5%	1/10W
R8072	1-216-864-11	SHORT CHIP	0		
R8073	1-216-821-11	METAL CHIP	1K	5%	1/10W
R8074	1-216-809-11	METAL CHIP	100	5%	1/10W
R8075	1-216-809-11	METAL CHIP	100	5%	1/10W
R8076	1-216-864-11	SHORT CHIP	0		
R8077	1-216-837-11	METAL CHIP	22K	5%	1/10W
R8078	1-218-660-91	METAL CHIP	47	0.5%	1/10W
R8079	1-216-847-11	METAL CHIP	150K	5%	1/10W
R8080	1-218-668-11	METAL CHIP	100	0.5%	1/10W
R8081	1-216-847-11	METAL CHIP	150K	5%	1/10W
R8082	1-216-833-11	METAL CHIP	10K	5%	1/10W
R8083	1-216-820-11	METAL CHIP	820	5%	1/10W
R8084	1-216-864-11	SHORT CHIP	0		
R8085	1-216-864-11	SHORT CHIP	0		

REF. NO.	PART NO.	DESCRIPTION			REMARK
R8086	1-216-864-11	SHORT CHIP	0		
R8087	1-216-864-11	SHORT CHIP	0		
R8088	1-216-829-11	METAL CHIP	4.7K	5%	1/10W
R8089	1-216-833-11	METAL CHIP	10K	5%	1/10W
R8091	1-216-825-11	METAL CHIP	2.2K	5%	1/10W
R8093	1-216-833-11	METAL CHIP	10K	5%	1/10W
R8094	1-216-864-11	SHORT CHIP	0		
R8095	1-216-864-11	SHORT CHIP	0		
R8098	1-216-825-11	METAL CHIP	2.2K	5%	1/10W
R8099	1-216-864-11	SHORT CHIP	0		
R8100	1-216-864-11	SHORT CHIP	0		
R8101	1-218-712-11	METAL CHIP	6.8K	0.5%	1/10W
R8102	1-216-864-11	SHORT CHIP	0		
R8103	1-216-813-11	METAL CHIP	220	5%	1/10W
R8105	1-218-704-11	METAL CHIP	3.3K	0.5%	1/10W
R8108	1-216-864-11	SHORT CHIP	0		
R8109	1-216-864-11	SHORT CHIP	0		
R8110	1-216-847-11	METAL CHIP	150K	5%	1/10W
R8111	1-216-823-11	METAL CHIP	1.5K	5%	1/10W
R8112	1-216-829-11	METAL CHIP	4.7K	5%	1/10W
R8113	1-216-857-11	METAL CHIP	1M	5%	1/10W
R8114	1-216-833-11	METAL CHIP	10K	5%	1/10W
R8115	1-216-833-11	METAL CHIP	10K	5%	1/10W
R8116	1-216-847-11	METAL CHIP	150K	5%	1/10W
R8117	1-216-825-11	METAL CHIP	2.2K	5%	1/10W
R8118	1-216-829-11	METAL CHIP	4.7K	5%	1/10W
R8119	1-216-857-11	METAL CHIP	1M	5%	1/10W
R8120	1-216-833-11	METAL CHIP	10K	5%	1/10W
R8121	1-216-833-11	METAL CHIP	10K	5%	1/10W
R8122	1-216-864-11	SHORT CHIP	0		
R8123	1-216-864-11	SHORT CHIP	0		
R8124	1-216-864-11	SHORT CHIP	0		
R8125	1-218-722-11	METAL CHIP	18K	0.5%	1/10W
R8127	1-218-716-11	METAL CHIP	10K	0.5%	1/10W
R8131	1-216-864-11	SHORT CHIP	0		
R8134	1-216-821-11	METAL CHIP	1K	5%	1/10W
R8138	1-216-833-11	METAL CHIP	10K	5%	1/10W
R8139	1-216-864-11	SHORT CHIP	0		
R8140	1-216-864-11	SHORT CHIP	0		
R8141	1-216-864-11	SHORT CHIP	0		
R8142	1-216-864-11	SHORT CHIP	0		
R8143	1-216-864-11	SHORT CHIP	0		
R8144	1-216-864-11	SHORT CHIP	0		
R8145	1-216-864-11	SHORT CHIP	0		
R8146	1-216-864-11	SHORT CHIP	0		
R8147	1-216-845-11	METAL CHIP	100K	5%	1/10W
R8148	1-216-864-11	SHORT CHIP	0		
R8151	1-216-845-11	METAL CHIP	100K	5%	1/10W
R8152	1-216-841-11	METAL CHIP	47K	5%	1/10W
R8153	1-216-833-11	METAL CHIP	10K	5%	1/10W
R8154	1-216-825-11	METAL CHIP	2.2K	5%	1/10W
R8155	1-216-845-11	METAL CHIP	100K	5%	1/10W
R8156	1-216-845-11	METAL CHIP	100K	5%	1/10W
R8157	1-216-825-11	METAL CHIP	2.2K	5%	1/10W
R8158	1-216-833-11	METAL CHIP	10K	5%	1/10W
R8159	1-216-825-11	METAL CHIP	2.2K	5%	1/10W
R8160	1-216-849-11	METAL CHIP	220K	5%	1/10W
R8161	1-216-841-11	METAL CHIP	47K	5%	1/10W
R8162	1-216-833-11	METAL CHIP	10K	5%	1/10W
R8164	1-216-845-11	METAL CHIP	100K	5%	1/10W
R8166	1-216-836-11	METAL CHIP	18K	5%	1/10W
R8168	1-216-839-11	METAL CHIP	33K	5%	1/10W
R8169	1-216-864-11	SHORT CHIP	0		

REF. NO.	PART NO.	DESCRIPTION			REMARK
R8179	1-216-833-11	METAL CHIP	10K	5%	1/10W
R8180	1-216-833-11	METAL CHIP	10K	5%	1/10W
R8185	1-216-833-11	METAL CHIP	10K	5%	1/10W
R8188	1-218-716-11	METAL CHIP	10K	0.5%	1/10W
R8189	1-218-722-11	METAL CHIP	18K	0.5%	1/10W
R8190	1-216-845-11	METAL CHIP	100K	5%	1/10W
R8191	1-216-821-11	METAL CHIP	1K	5%	1/10W
R8192	1-216-845-11	METAL CHIP	100K	5%	1/10W
R8193	1-216-797-11	METAL CHIP	10	5%	1/10W
R8194	1-216-821-11	METAL CHIP	1K	5%	1/10W
R8195	1-216-845-11	METAL CHIP	100K	5%	1/10W
R8196	1-216-845-11	METAL CHIP	100K	5%	1/10W
R8197	1-216-797-11	METAL CHIP	10	5%	1/10W
R8198	1-216-845-11	METAL CHIP	100K	5%	1/10W
R8199	1-216-821-11	METAL CHIP	1K	5%	1/10W
R8200	1-216-845-11	METAL CHIP	100K	5%	1/10W
R8201	1-216-797-11	METAL CHIP	10	5%	1/10W
R8202	1-216-833-11	METAL CHIP	10K	5%	1/10W
R8203	1-216-833-11	METAL CHIP	10K	5%	1/10W
R8204	1-216-833-11	METAL CHIP	10K	5%	1/10W
R8205	1-216-864-11	SHORT CHIP	0		
R8206	1-216-864-11	SHORT CHIP	0		
R8207	1-216-864-11	SHORT CHIP	0		
R8208	1-216-864-11	SHORT CHIP	0		
R8209	1-216-864-11	SHORT CHIP	0		
R8210	1-216-864-11	SHORT CHIP	0		
R8211	1-216-864-11	SHORT CHIP	0		
R8212	1-216-864-11	SHORT CHIP	0		
R8213	1-216-864-11	SHORT CHIP	0		
R8214	1-216-864-11	SHORT CHIP	0		
R8215	1-216-864-11	SHORT CHIP	0		
R8216	1-216-864-11	SHORT CHIP	0		
R8217	1-216-864-11	SHORT CHIP	0		
R8218	1-216-864-11	SHORT CHIP	0		
R8219	1-216-864-11	SHORT CHIP	0		
R8220	1-216-864-11	SHORT CHIP	0		
R8221	1-216-864-11	SHORT CHIP	0		
R8222	1-216-864-11	SHORT CHIP	0		
R8223	1-216-864-11	SHORT CHIP	0		
R8224	1-216-864-11	SHORT CHIP	0		
R8225	1-216-864-11	SHORT CHIP	0		
R8226	1-216-864-11	SHORT CHIP	0		
R8227	1-216-801-11	METAL CHIP	22	5%	1/10W
R8228	1-216-801-11	METAL CHIP	22	5%	1/10W
R8234	1-216-833-11	METAL CHIP	10K	5%	1/10W
R8235	1-216-833-11	METAL CHIP	10K	5%	1/10W
R8236	1-216-806-11	METAL CHIP	56	5%	1/10W
R8237	1-216-825-11	METAL CHIP	2.2K	5%	1/10W
R8238	1-216-809-11	METAL CHIP	100	5%	1/10W
R8239	1-216-825-11	METAL CHIP	2.2K	5%	1/10W
R8240	1-216-809-11	METAL CHIP	100	5%	1/10W
R8241	1-216-806-11	METAL CHIP	56	5%	1/10W
R8245	1-218-720-11	METAL CHIP	15K	0.5%	1/10W
R8246	1-218-720-11	METAL CHIP	15K	0.5%	1/10W
R8247	1-218-720-11	METAL CHIP	15K	0.5%	1/10W
R8251	1-216-833-11	METAL CHIP	10K	5%	1/10W
R8252	1-216-833-11	METAL CHIP	10K	5%	1/10W
R8253	1-216-833-11	METAL CHIP	10K	5%	1/10W
R8254	1-216-833-11	METAL CHIP	10K	5%	1/10W
R8255	1-218-692-11	METAL CHIP	1K	0.5%	1/10W
R8256	1-218-712-11	METAL CHIP	6.8K	0.5%	1/10W
R8257	1-218-742-11	METAL CHIP	120K	0.5%	1/10W
R8504	1-216-864-11	SHORT CHIP	0		

REF. NO.	PART NO.	DESCRIPTION			REMARK
R8505	1-216-864-11	SHORT CHIP	0		
R8506	1-216-835-11	METAL CHIP	15K	5%	1/10W
R8507	1-216-832-11	METAL CHIP	8.2K	5%	1/10W
R8508	1-218-726-11	METAL CHIP	27K	0.5%	1/10W
R8509	1-216-832-11	METAL CHIP	8.2K	5%	1/10W
R8510	1-216-833-11	METAL CHIP	10K	5%	1/10W
R8511	1-216-845-11	METAL CHIP	100K	5%	1/10W
R8512	1-216-841-11	METAL CHIP	47K	5%	1/10W
R8513	1-218-726-11	METAL CHIP	27K	0.5%	1/10W
R8514	1-216-851-11	METAL CHIP	330K	5%	1/10W
R8515	1-216-835-11	METAL CHIP	15K	5%	1/10W
R8516	1-216-841-11	METAL CHIP	47K	5%	1/10W
R8519	1-218-867-11	METAL CHIP	6.8K	5%	1/10W
R8520	1-216-833-11	METAL CHIP	10K	5%	1/10W
R8522	1-216-835-11	METAL CHIP	15K	5%	1/10W
R8523	1-216-841-11	METAL CHIP	47K	5%	1/10W
R8524	1-216-837-11	METAL CHIP	22K	5%	1/10W
R8525	1-218-867-11	METAL CHIP	6.8K	5%	1/10W
R8526	1-216-835-11	METAL CHIP	15K	5%	1/10W
R8527	1-216-833-11	METAL CHIP	10K	5%	1/10W
R8531	1-218-867-11	METAL CHIP	6.8K	5%	1/10W
R8532	1-218-867-11	METAL CHIP	6.8K	5%	1/10W
R8535	1-216-851-11	METAL CHIP	330K	5%	1/10W
R8536	1-216-861-11	METAL CHIP	2.2M	5%	1/10W
R8537	1-216-861-11	METAL CHIP	2.2M	5%	1/10W
R8541	1-216-845-11	METAL CHIP	100K	5%	1/10W
R8542	1-216-835-11	METAL CHIP	15K	5%	1/10W
R8544	1-216-833-11	METAL CHIP	10K	5%	1/10W
R8545	1-216-836-11	METAL CHIP	18K	5%	1/10W
R8554	1-216-801-11	METAL CHIP	22	5%	1/10W
R8555	1-216-801-11	METAL CHIP	22	5%	1/10W
R8559	1-216-841-11	METAL CHIP	47K	5%	1/10W
R8560	1-216-857-11	METAL CHIP	1M	5%	1/10W
R8570	1-216-825-11	METAL CHIP	2.2K	5%	1/10W
R8571	1-218-718-11	METAL CHIP	12K	0.5%	1/10W
R8572	1-216-825-11	METAL CHIP	2.2K	5%	1/10W
R8573	1-218-718-11	METAL CHIP	12K	0.5%	1/10W
R8574	1-218-292-11	METAL CHIP	20K	5%	1/10W
R8575	1-218-292-11	METAL CHIP	20K	5%	1/10W
R8576	1-218-292-11	METAL CHIP	20K	5%	1/10W
R8577	1-218-292-11	METAL CHIP	20K	5%	1/10W
R8578	1-216-821-11	METAL CHIP	1K	5%	1/10W
R8579	1-216-837-11	METAL CHIP	22K	5%	1/10W
R8580	1-216-819-11	METAL CHIP	680	5%	1/10W
R8581	1-216-826-11	METAL CHIP	2.7K	5%	1/10W
R8583	1-216-837-11	METAL CHIP	22K	5%	1/10W
R8584	1-216-864-11	SHORT CHIP	0		
R8586	1-216-864-11	SHORT CHIP	0		
R8587	1-216-839-11	METAL CHIP	33K	5%	1/10W
R8588	1-216-829-11	METAL CHIP	4.7K	5%	1/10W
R8590	1-216-829-11	METAL CHIP	4.7K	5%	1/10W
R8591	1-216-837-11	METAL CHIP	22K	5%	1/10W
R8592	1-216-841-11	METAL CHIP	47K	5%	1/10W
R8593	1-216-841-11	METAL CHIP	47K	5%	1/10W
R8594	1-216-825-11	METAL CHIP	2.2K	5%	1/10W
R8595	1-216-833-11	METAL CHIP	10K	5%	1/10W
R8596	1-216-801-11	METAL CHIP	22	5%	1/10W
R8597	1-216-801-11	METAL CHIP	22	5%	1/10W
R8598	1-216-864-11	SHORT CHIP	0		
R8599	1-216-825-11	METAL CHIP	2.2K	5%	1/10W
R8600	1-216-833-11	METAL CHIP	10K	5%	1/10W
R8601	1-216-077-91	RES-CHIP	15K	5%	1/10W
R8602	1-216-825-11	METAL CHIP	2.2K	5%	1/10W

REF. NO.	PART NO.	DESCRIPTION			REMARK
R8603	1-216-688-11	METAL CHIP	36K	0.5%	1/10W
R8604	1-216-653-11	METAL CHIP	1.2K	0.5%	1/10W
R8605	1-216-688-11	METAL CHIP	36K	0.5%	1/10W
R8606	1-216-653-11	METAL CHIP	1.2K	0.5%	1/10W
R8607	1-216-825-11	METAL CHIP	2.2K	5%	1/10W
R8608	1-215-857-71	METAL OXIDE	10	5%	1W
R8610	1-216-841-11	METAL CHIP	47K	5%	1/10W
R8611	1-216-841-11	METAL CHIP	47K	5%	1/10W
R8612	1-215-857-71	METAL OXIDE	10	5%	1W
R8613	1-216-864-11	SHORT CHIP	0		
R8615	1-216-864-11	SHORT CHIP	0		
R8621	1-216-841-11	METAL CHIP	47K	5%	1/10W
R8624	1-216-837-11	METAL CHIP	22K	5%	1/10W
R8629	1-216-841-11	METAL CHIP	47K	5%	1/10W
R8631	1-216-821-11	METAL CHIP	1K	5%	1/10W
R8632	1-216-821-11	METAL CHIP	1K	5%	1/10W
R8633	1-216-833-11	METAL CHIP	10K	5%	1/10W
R8636	1-218-726-11	METAL CHIP	27K	0.5%	1/10W
R8637	1-216-841-11	METAL CHIP	47K	5%	1/10W
R8638	1-216-841-11	METAL CHIP	47K	5%	1/10W
R8641	1-216-834-11	METAL CHIP	12K	5%	1/10W
R8642	1-216-833-11	METAL CHIP	10K	5%	1/10W
R8645	1-218-695-11	METAL CHIP	1.3K	0.5%	1/10W
R8646	1-218-726-11	METAL CHIP	27K	0.5%	1/10W
R8647	1-216-809-11	METAL CHIP	100	5%	1/10W
R8648	1-216-845-11	METAL CHIP	100K	5%	1/10W
R8650	1-216-837-11	METAL CHIP	22K	5%	1/10W
R8651	1-216-833-11	METAL CHIP	10K	5%	1/10W
R8654	1-216-864-11	SHORT CHIP	0		
R8655	1-216-821-11	METAL CHIP	1K	5%	1/10W
R8656	1-216-834-11	METAL CHIP	12K	5%	1/10W
R8665	1-216-821-11	METAL CHIP	1K	5%	1/10W
R8666	1-216-829-11	METAL CHIP	4.7K	5%	1/10W
R8668	1-216-864-11	SHORT CHIP	0		
R8669	1-216-841-11	METAL CHIP	47K	5%	1/10W
R8670	1-216-837-11	METAL CHIP	22K	5%	1/10W
R8671	1-216-864-11	SHORT CHIP	0		
R8672	1-216-809-11	METAL CHIP	100	5%	1/10W
R8673	1-216-833-11	METAL CHIP	10K	5%	1/10W
R8674	1-218-867-11	METAL CHIP	6.8K	5%	1/10W
R8675	1-216-839-11	METAL CHIP	33K	5%	1/10W
R8676	1-216-357-00	METAL OXIDE	4.7	5%	1W
R8677	1-216-837-11	METAL CHIP	22K	5%	1/10W
R8678	1-216-834-11	METAL CHIP	12K	5%	1/10W
R8679	1-216-825-11	METAL CHIP	2.2K	5%	1/10W

< TUNER >

TU8001	8-598-594-10	TUNER, FSS BTF-FA421
TU8002	8-598-593-20	TUNER, FSS BTF-WA421

< VIBRATOR >

X8500	1-577-358-21	VIBRATOR, CERAMIC

****

*	A-1302-364-A	F BOARD, COMPLETE
		**********
	1-533-223-11	FUSE HOLDER
*	4-374-846-01	COVER, CAPACITOR, CAP TYPE

REF. NO.	PART NO.	DESCRIPTION			REMARK
		< CAPACITOR >			
C1902	1-162-962-11	CERAMIC CHIP	470pF	10%	50V
C1903	1-107-652-11	ELECT	10μF	20%	250V
C1906	1-164-361-11	CERAMIC CHIP	0.047μF		25V
C1910	1-162-964-11	CERAMIC CHIP	0.001μF	10%	50V
C1916	1-119-876-11	MYLAR	0.01μF	10%	400V
C1917	1-126-965-91	ELECT	22μF	20%	50V
C1921	1-126-940-11	ELECT	330μF	20%	25V
C1954	1-126-947-11	ELECT	47μF	20%	35V
C1957	1-162-964-11	CERAMIC CHIP	0.001μF	10%	50V
C1958	1-162-964-11	CERAMIC CHIP	0.001μF	10%	50V
⚠ C1960	1-104-708-11	MYLAR	0.47μF	20%	250V
⚠ C1961	1-119-888-51	CERAMIC	2200pF	20%	250V
⚠ C1962	1-119-888-51	CERAMIC	2200pF	20%	250V
⚠ C1964	1-104-708-11	MYLAR	0.47μF	20%	250V
C1976	1-161-964-91	CERAMIC	0.0047μF		250V
C1977	1-161-964-91	CERAMIC	0.0047μF		250V
C1978	1-161-964-91	CERAMIC	0.0047μF		250V
C1979	1-161-964-91	CERAMIC	0.0047μF		250V
C1980	1-126-934-11	ELECT	220μF	20%	16V

< CONNECTOR >

*CN1901	1-580-843-11	PIN, CONNECTOR (POWER)
CN1906	1-695-915-11	TAB (CONTACT)
*CN1907	1-580-689-11	PIN, CONNECTOR (PC BOARD) 4P
*CN1908	1-537-711-11	TAB, FASTEN (PCB)
CN1910	1-695-915-11	TAB (CONTACT)
*CN1913	1-564-508-11	PLUG, CONNECTOR 5P
*CN1914	1-537-711-11	TAB, FASTEN (PCB)

< DIODE >

D1901	8-719-077-76	DIODE	D2SB60A-F04
D1903	8-719-037-39	DIODE	RD18SB2-T1
D1904	8-719-404-50	DIODE	MA111-TX
D1905	8-719-948-45	DIODE	ERA22-08
D1906	8-719-033-53	DIODE	RD6.8SB2-T1
D1910	8-719-510-48	DIODE	D1N20R-TR2
D1914	8-719-510-02	DIODE	D1NS4-TR2
D1929	8-719-404-50	DIODE	MA111-TX
D1930	8-719-404-50	DIODE	MA111-TX
D1946	8-719-200-02	DIODE	10E2
D1947	8-719-200-02	DIODE	10E2
D1948	8-719-200-02	DIODE	10E2
D1949	8-719-200-02	DIODE	10E2
D1950	8-719-404-50	DIODE	MA111-TX
D1951	8-719-948-45	DIODE	ERA22-08
D1952	8-719-404-50	DIODE	MA111-TX

< FUSE >

⚠ F1901	1-576-193-11	FUSE	6.3A	125V

< COIL >

L1904	1-412-537-31	INDUCTOR	100μH

< PHOTOCOUPLER >

⚠PH1903	8-749-924-35	PHOTOCOUPLER	ON3171-R
⚠PH1904	8-749-924-35	PHOTOCOUPLER	ON3171-R

Les composants identifies par une trame et une marque ⚠ sont critiques pour la securite. Ne les remplacer que par une piece portant le numero specifie.

The components identified by shading and mark ⚠ are critical for safety.
Replace only with part number specified.

REF. NO.	PART NO.	DESCRIPTION			REMARK
		< TRANSISTOR >			
Q1901	8-729-046-40	TRANSISTOR 2SK2663			
Q1902	8-729-422-27	TRANSISTOR 2SD601A-Q			
		< RESISTOR >			
R1901	1-260-302-51	CARBON	6.8	5%	1/2W
R1903	1-216-819-11	METAL CHIP	680	5%	1/10W
R1904	1-240-205-91	METAL	22M	5%	1/2W
R1905	1-216-801-11	METAL CHIP	22	5%	1/10W
R1906	1-249-389-11	CARBON	4.7	5%	1/4W
R1908	1-216-833-11	METAL CHIP	10K	5%	1/10W
R1909	1-216-817-11	METAL CHIP	470	5%	1/10W
R1912	1-245-478-21	METAL	470K	1%	1/4W
R1946	1-216-825-11	METAL CHIP	2.2K	5%	1/10W
R1948	1-216-841-11	METAL CHIP	47K	5%	1/10W
R1951	1-202-962-11	CEMENTED	3.3	5%	10W
R1953	1-219-759-11	METAL	1M	5%	1/2W
R1962	1-218-265-11	METAL	8.2M	5%	1W
R1963	1-216-829-11	METAL CHIP	4.7K	5%	1/10W
R1964	1-260-328-11	CARBON	1K	5%	1/2W
R1965	1-243-692-71	METAL OXIDE	220	5%	1W
R1966	1-216-829-11	METAL CHIP	4.7K	5%	1/10W
R1967	1-216-821-11	METAL CHIP	1K	5%	1/10W
R1992	1-249-397-11	CARBON	22	5%	1/4W
R1993	1-249-397-11	CARBON	22	5%	1/4W
		< RELAY >			
RY1901	1-755-407-11	RELAY (AC POWER)			
		< TRANSFORMER >			
⚠ T1901	1-431-852-11	TRANSFORMER, CONVERTER (SRT)			
⚠ T1905	1-435-617-11	TRANSFORMER, LINE FILTER			
⚠ T1906	1-435-617-11	TRANSFORMER, LINE FILTER			
		< THERMISTOR >			
TH1901	1-803-586-41	THERMISTOR			
		< VARISTOR >			
⚠VD19011	801-058-51	VARISTOR ERZV14D271			

****

*	A-1302-365-A	G1 BOARD, COMPLETE			
		**********			
	4-382-854-01	SCREW (M3X8), P, SW (+)			
		< CAPACITOR >			
C1601	1-126-967-11	ELECT	47μF	20%	50V
C1602	1-162-970-11	CERAMIC CHIP	0.01μF	10%	25V
C1604	1-161-830-00	CERAMIC	0.0047μF	99%	500V
C1605	1-161-830-00	CERAMIC	0.0047μF	99%	500V
C1606	1-162-970-11	CERAMIC CHIP	0.01μF	10%	25V
C1607	1-161-830-00	CERAMIC	0.0047μF	99%	500V
C1608	1-161-830-00	CERAMIC	0.0047μF	99%	500V
C1609	1-162-970-11	CERAMIC CHIP	0.01μF	10%	25V
C1610	1-126-942-61	ELECT	1000μF	20%	25V
C1611	1-137-750-11	ELECT	1500μF	20%	250V
C1612	1-137-750-11	ELECT	1500μF	20%	250V
C1613	1-126-967-11	ELECT	47μF	20%	50V
C1614	1-162-974-11	CERAMIC CHIP	0.01μF		50V
C1616	1-162-970-11	CERAMIC CHIP	0.01μF	10%	25V
C1618	1-136-165-00	FILM	0.1μF	5%	50V
C1620	1-126-960-11	ELECT	1μF	20%	50V
C1621	1-162-970-11	CERAMIC CHIP	0.01μF	10%	25V
C1622	1-126-961-11	ELECT	2.2μF	20%	50V
C1623	1-136-479-11	FILM	0.001μF	2%	100V
C1624	1-126-962-11	ELECT	3.3μF	20%	50V
C1625	1-164-156-11	CERAMIC CHIP	0.1μF		25V
C1626	1-100-309-21	ELECT CHIP	22μF	20%	25V
C1627	1-125-969-91	CERAMIC	680pF	10%	1KV
C1628	1-125-969-91	CERAMIC	680pF	10%	1KV
C1629	1-165-953-11	FILM	47000pF	3%	800V
C1630	1-164-156-11	CERAMIC CHIP	0.1μF		25V
C1631	1-162-974-11	CERAMIC CHIP	0.01μF		50V
C1636	1-128-955-31	ELECT	2200μF	20%	25V
C1637	1-128-955-31	ELECT	2200μF	20%	25V
C1639	1-164-156-11	CERAMIC CHIP	0.1μF		25V
C1641	1-128-582-11	ELECT	10μF	20%	100V
C1642	1-131-976-11	ELECT	820μF	20%	25V
C1643	1-131-976-11	ELECT	820μF	20%	25V
C1644	1-131-976-11	ELECT	820μF	20%	25V
C1646	1-165-908-11	CERAMIC CHIP	1μF	10%	10V
C1647	1-165-908-11	CERAMIC CHIP	1μF	10%	10V
C1649	1-115-416-11	CERAMIC CHIP	0.001μF	5%	25V
C1650	1-115-416-11	CERAMIC CHIP	0.001μF	5%	25V
C1651	1-165-176-11	CERAMIC CHIP	0.047μF	10%	16V
C1653	1-165-681-21	ELECT CHIP	180μF	20%	16V
C1655	1-162-970-11	CERAMIC CHIP	0.01μF	10%	25V
C1656	1-162-970-11	CERAMIC CHIP	0.01μF	10%	25V
C1659	1-137-194-81	FILM	0.47μF	5%	50V
C1661	1-162-974-11	CERAMIC CHIP	0.01μF		50V
C1665	1-100-309-21	ELECT CHIP	22μF	20%	25V
C1670	1-100-714-11	ELECT	100μF	20%	400V
C1671	1-100-714-11	ELECT	100μF	20%	400V
C1672	1-161-830-00	CERAMIC	0.0047μF		500V
C1673	1-131-976-11	ELECT	820μF	20%	25V
C1674	1-100-309-21	ELECT CHIP	22μF	20%	25V
C1675	1-164-156-11	CERAMIC CHIP	0.1μF		25V
C1680	1-164-156-11	CERAMIC CHIP	0.1μF		25V
C1681	1-110-563-11	CERAMIC CHIP	0.068μF	10%	16V
C1682	1-164-156-11	CERAMIC CHIP	0.1μF		25V
C1683	1-164-156-11	CERAMIC CHIP	0.1μF		25V
C1684	1-164-156-11	CERAMIC CHIP	0.1μF		25V
C1685	1-100-309-21	ELECT CHIP	22μF	20%	25V
C1686	1-164-156-11	CERAMIC CHIP	0.1μF		25V
C1687	1-164-156-11	CERAMIC CHIP	0.1μF		25V
C1688	1-164-156-11	CERAMIC CHIP	0.1μF		25V
C1689	1-165-677-21	ELECT CHIP	330μF	20%	10V
C1690	1-104-665-11	ELECT	100μF	20%	25V
C1691	1-126-927-11	ELECT	2200μF	20%	10V
C1692	1-104-665-11	ELECT	100μF	20%	25V
C1693	1-126-926-11	ELECT	1000μF	20%	10V
C1711	1-162-970-11	CERAMIC CHIP	0.01μF	10%	25V
C1712	1-162-970-11	CERAMIC CHIP	0.01μF	10%	25V
		< CONNECTOR >			
*CN1602	1-691-960-21	PIN, CONNECTOR (PC BOARD) 3P			
*CN1605	1-564-511-61	PLUG, CONNECTOR 8P			
*CN1609	1-580-689-11	PIN, CONNECTOR (PC BOARD) 4P			

REF. NO.	PART NO.	DESCRIPTION	REMARK
CN1610	1-695-915-11	TAB (CONTACT)	
*CN1617	1-564-511-11	PLUG, CONNECTOR 8P	
*CN1618	1-564-506-11	PLUG, CONNECTOR 3P	
*CN1620	1-766-177-11	PIN, CONNECTOR (PC BOARD) 9P	
CN1622	1-779-092-11	PIN, CONNECTOR (PC BOARD) 10P	
*CN1623	1-691-960-11	PIN, CONNECTOR (PC BOARD) 3P	
*CN1624	1-564-511-11	PLUG, CONNECTOR 8P	
CN1625	1-695-915-11	TAB (CONTACT)	
CN1626	1-695-915-11	TAB (CONTACT)	
CN1627	1-695-915-11	TAB (CONTACT)	
CN1628	1-695-915-11	TAB (CONTACT)	
CN1629	1-764-101-11	PIN, CONNECTOR (PC BOARD) 2P	
*CN1630	1-564-508-11	PLUG, CONNECTOR 5P	
		< DIODE >	
D1602	8-719-022-99	DIODE D6SB60L	
D1607	8-719-979-64	DIODE µF4005PKG23	
D1608	8-719-064-49	DIODE D4SBL40	
D1612	8-719-404-50	DIODE MA111-TX	
D1613	8-719-063-73	DIODE D1NL20U-TR	
D1618	8-719-404-50	DIODE MA111-TX	
D1619	8-719-037-39	DIODE RD18SB2-T1	
D1620	8-719-064-40	DIODE DE5SC3ML-TA	
D1621	8-719-064-40	DIODE DE5SC3ML-TA	
D1622	8-719-063-73	DIODE D1NL20U-TR	
D1623	8-719-510-09	DIODE D10SC6M	
D1624	8-719-060-89	DIODE D4SBS6-F	
D1625	8-719-510-09	DIODE D10SC6M	
D1626	8-719-056-23	DIODE MA2S111-(K8).S0	
D1628	8-719-404-50	DIODE MA111-TX	
D1631	8-719-404-50	DIODE MA111-TX	
D1632	8-719-404-50	DIODE MA111-TX	
D1633	8-719-068-00	DIODE ERC04-06SE	
D1634	8-719-068-00	DIODE ERC04-06SE	
D1635	8-719-404-50	DIODE MA111-TX	
D1638	8-719-404-50	DIODE MA111-TX	
D1639	8-719-037-39	DIODE RD18SB2-T1	
D1640	8-719-404-50	DIODE MA111-TX	
D1641	8-719-158-49	DIODE RD12SB2-T1	
D1642	8-719-404-50	DIODE MA111-TX	
D1643	8-719-037-07	DIODE RD7.5SB2-T1	
D1645	8-719-056-23	DIODE MA2S111-(K8).S0	
D1646	8-719-404-50	DIODE MA111-TX	
D1647	8-719-063-73	DIODE D1NL20U-TR	
		< FUSE >	
⚠ F1602	1-533-272-11	FUSE 4A 125V	
⚠ F1603	1-533-272-11	FUSE 4A 125V	
		< FERRITE BEAD >	
FB1601	1-469-869-21	FERRITE 0µH	
FB1602	1-469-869-21	FERRITE 0µH	
		< IC >	
IC1601	6-703-355-01	IC MCZ3001DA	
IC1602	8-759-198-31	IC µPC1093J-1-T	
IC1603	6-704-852-01	IC MD3222N	
IC1604	6-704-852-01	IC MD3222N	
IC1606	8-759-284-06	IC PQ30RV31	
IC1607	8-759-098-24	IC PQ30RV11	
		< COIL >	
L1605	1-412-537-31	INDUCTOR 100µH	
L1606	1-424-789-41	INDUCTOR 10µH	
L1607	1-412-525-31	INDUCTOR 10µH	
L1608	1-412-525-31	INDUCTOR 10µH	
L1609	1-424-789-41	INDUCTOR 10µH	
L1610	1-406-974-41	INDUCTOR 33µH	
L1611	1-406-974-41	INDUCTOR 33µH	
L1616	1-406-983-11	INDUCTOR 1mH	
		< PHOTOCOUPLER >	
PH1601	8-749-924-35	PHOTOCOUPLER ON3171-R	
PH1602	8-749-924-35	PHOTOCOUPLER ON3171-R	
		< IC LINK >	
⚠PS1601	1-576-390-91	IC LINK 2.5A 50V	
⚠PS1602	1-576-390-91	IC LINK 2.5A 50V	
		< TRANSISTOR >	
Q1603	8-729-422-27	TRANSISTOR 2SD601A-Q	
Q1604	8-729-216-22	TRANSISTOR 2SA1162-G	
Q1605	8-729-422-27	TRANSISTOR 2SD601A-Q	
Q1606	8-729-052-32	TRANSISTOR IRFIB7N50A-LF31	
Q1607	8-729-052-32	TRANSISTOR IRFIB7N50A-LF31	
Q1608	8-729-421-22	TRANSISTOR UN2211	
Q1609	8-729-421-22	TRANSISTOR UN2211	
Q1610	8-729-421-22	TRANSISTOR UN2211	
		< RESISTOR >	
R1607	1-212-897-00	FUSIBLE 470 5% 1/4W	
R1610	1-260-131-11	CARBON 470K 5% 1/2W	
R1611	1-260-131-11	CARBON 470K 5% 1/2W	
⚠ R1613	1-220-778-81	FUSIBLE 0.1 10% 1/2W	
R1614	1-245-471-21	METAL 240K 1% 1/4W	
⚠ R1615	1-249-377-11	CARBON 0.47 5% 1/4W	
R1618	1-216-361-00	METAL OXIDE 0.22 5% 2W	
R1619	1-220-778-21	FUSIBLE 0.1 10% 1/2W	
R1620	1-216-833-11	METAL CHIP 10K 5% 1/10W	
R1621	1-216-829-11	METAL CHIP 4.7K 5% 1/10W	
R1622	1-216-833-11	METAL CHIP 10K 5% 1/10W	
R1623	1-216-821-11	METAL CHIP 1K 5% 1/10W	
R1624	1-245-471-21	METAL 240K 1% 1/4W	
R1625	1-245-471-21	METAL 240K 1% 1/4W	
R1626	1-245-472-21	METAL 270K 1% 1/4W	
R1627	1-249-403-11	CARBON 68 5% 1/4W	
R1628	1-218-720-11	METAL CHIP 15K 0.5% 1/10W	
R1629	1-218-715-11	METAL CHIP 9.1K 0.5% 1/10W	
R1630	1-216-833-11	METAL CHIP 10K 5% 1/10W	
R1631	1-216-833-11	METAL CHIP 10K 5% 1/10W	
R1632	1-249-393-11	CARBON 10 5% 1/4W	
R1633	1-216-833-11	METAL CHIP 10K 5% 1/10W	
R1634	1-249-393-11	CARBON 10 5% 1/4W	
R1635	1-216-833-11	METAL CHIP 10K 5% 1/10W	
R1637	1-219-759-41	METAL 1M 5% 1/2W	
R1637	1-219-759-11	METAL 1M 5% 1/2W	
R1638	1-216-361-00	METAL OXIDE 0.22 5% 2W	
R1639	1-218-730-11	METAL CHIP 39K 0.5% 1/10W	

Les composants identifies par une trame et une marque ⚠ sont critiques pour la securite. Ne les remplacer que par une piece portant le numero specifie.

The components identified by shading and mark ⚠ are critical for safety.
Replace only with part number specified.

REF. NO.	PART NO.	DESCRIPTION			REMARK
R1640	1-216-350-11	METAL OXIDE	1.2	5%	1W
R1641	1-216-821-11	METAL CHIP	1K	5%	1/10W
R1642	1-216-825-11	METAL CHIP	2.2K	5%	1/10W
R1643	1-218-712-11	METAL CHIP	6.8K	0.5%	1/10W
R1644	1-218-668-11	METAL CHIP	100	0.5%	1/10W
R1645	1-218-680-11	METAL CHIP	330	0.5%	1/10W
R1647	1-216-817-11	METAL CHIP	470	5%	1/10W
R1649	1-216-821-11	METAL CHIP	1K	5%	1/10W
R1650	1-218-692-11	METAL CHIP	1K	0.5%	1/10W
R1653	1-249-377-11	CARBON	0.47	5%	1/4W
⚠ R1654	1-260-288-11	CARBON	0.47	5%	1/2W
⚠ R1655	1-260-288-11	CARBON	0.47	5%	1/2W
R1656	1-215-904-11	METAL OXIDE	100K	5%	2W
R1657	1-215-904-11	METAL OXIDE	100K	5%	2W
R1658	1-216-845-11	METAL CHIP	100K	5%	1/10W
R1659	1-216-864-11	SHORT CHIP	0		
R1660	1-218-689-11	METAL CHIP	750	0.5%	1/10W
R1661	1-218-718-11	METAL CHIP	12K	0.5%	1/10W
R1662	1-216-833-11	METAL CHIP	10K	5%	1/10W
R1664	1-216-864-11	SHORT CHIP	0		
R1665	1-216-864-11	SHORT CHIP	0		
R1666	1-218-692-11	METAL CHIP	1K	0.5%	1/10W
R1671	1-216-845-11	METAL CHIP	100K	5%	1/10W
R1674	1-216-864-11	SHORT CHIP	0		
R1675	1-216-821-11	METAL CHIP	1K	5%	1/10W
R1676	1-216-864-11	SHORT CHIP	0		
R1677	1-218-680-11	METAL CHIP	330	0.5%	1/10W
R1678	1-218-692-11	METAL CHIP	1K	0.5%	1/10W
R1679	1-218-696-11	METAL CHIP	1.5K	0.5%	1/10W
R1680	1-218-684-11	METAL CHIP	470	0.5%	1/10W
R1681	1-218-700-11	METAL CHIP	2.2K	0.5%	1/10W
R1682	1-218-692-11	METAL CHIP	1K	0.5%	1/10W
R1683	1-216-864-11	SHORT CHIP	0		
R1684	1-216-864-11	SHORT CHIP	0		
R1686	1-216-839-11	METAL CHIP	33K	5%	1/10W
R1687	1-216-833-11	METAL CHIP	10K	5%	1/10W
R1688	1-218-712-11	METAL CHIP	6.8K	0.5%	1/10W
R1689	1-216-845-11	METAL CHIP	100K	5%	1/10W
R1690	1-216-837-11	METAL CHIP	22K	5%	1/10W
R1691	1-216-821-11	METAL CHIP	1K	5%	1/10W
R1692	1-216-295-91	SHORT CHIP	0		
R1693	1-216-295-91	SHORT CHIP	0		
R1694	1-216-295-91	SHORT CHIP	0		
R1695	1-216-295-91	SHORT CHIP	0		
R1696	1-216-864-11	SHORT CHIP	0		
R1698	1-216-864-11	SHORT CHIP	0		

< RELAY >

⚠RY1601	1-755-407-11	RELAY (AC POWER)			

< TRANSFORMER >

⚠ T1603	1-443-102-11	CONVERTER TRANSFORMER (PIT)			

****

REF. NO.	PART NO.	DESCRIPTION			REMARK
*	A-1410-465-A	G2 BOARD, COMPLETE			
		**********			
	4-382-854-01	SCREW (M3X8), P, SW (+)			

< CAPACITOR >

C6900	1-137-639-21	MYLAR	0.47μF	10%	450V
C6902	1-162-964-11	CERAMIC CHIP	0.001μF	10%	50V
C6903	1-126-964-11	ELECT	10μF	20%	50V
C6904	1-126-959-11	ELECT	0.47μF	20%	50V
C6906	1-126-967-11	ELECT	47μF	20%	50V
C6907	1-162-970-11	CERAMIC CHIP	0.01μF	10%	25V
C6908	1-136-479-11	FILM	0.001μF	2%	100V
C6909	1-136-165-00	FILM	0.1μF	5%	50V
C6911	1-126-947-11	ELECT	47μF	20%	35V
C6914	1-117-219-11	CERAMIC	68pF	5%	1KV
C6915	1-117-219-11	CERAMIC	68pF	5%	1KV
C6916	1-100-624-11	FILM	4700pF	3%	800V
C6917	1-126-968-11	ELECT	100μF	20%	50V
C6918	1-126-968-11	ELECT	100μF	20%	50V
C6919	1-126-926-11	ELECT	1000μF	20%	10V
C6921	1-128-547-11	ELECT	6800μF	20%	16V
C6923	1-126-933-11	ELECT	100μF	20%	16V
C6925	1-162-970-11	CERAMIC CHIP	0.01μF	10%	25V
C6926	1-126-935-11	ELECT	470μF	20%	16V
C6929	1-126-933-11	ELECT	100μF	20%	16V
C6930	1-162-970-11	CERAMIC CHIP	0.01μF	10%	25V
C6931	1-107-826-11	CERAMIC CHIP	0.1μF	10%	16V
C6932	1-162-964-11	CERAMIC CHIP	0.001μF	10%	50V

< CONNECTOR >

*CN6900	1-580-844-11	PIN, CONNECTOR (POWER)			
*CN6901	1-766-179-11	PIN, CONNECTOR (PC BOARD) 2P			
*CN6902	1-564-512-11	PLUG, CONNECTOR 9P			

< DIODE >

D6901	8-719-083-78	DIODE	10ERA60-TP		
D6902	8-719-082-03	DIODE	MM3Z15VT1		
D6903	8-719-082-03	DIODE	MM3Z15VT1		
D6904	8-719-082-03	DIODE	MM3Z15VT1		
D6905	8-719-082-03	DIODE	MM3Z15VT1		
D6907	6-500-567-21	DIODE	10ERB20-TB5		
D6908	6-500-567-21	DIODE	10ERB20-TB5		
D6909	8-719-022-97	DIODE	D2S4MTA1		
D6910	8-719-510-12	DIODE	D10SC4M		
D6913	8-719-068-71	DIODE	PTZ-TE25-13A		
D6914	8-719-082-03	DIODE	MM3Z15VT1		
D6916	8-719-081-97	DIODE	MMDL914T1		

< FERRITE BEAD >

FB6900	1-469-578-11	FERRITE	1.1μH		

< IC >

IC6900	6-703-355-01	IC	MCZ3001DA		
IC6901	8-759-586-17	IC	TL1431CZ-AP		
IC6902	8-759-470-65	IC	PQ05RD1B		

REF. NO.	PART NO.	DESCRIPTION				REMARK
		< FERRITE BEAD >				
JW6900	1-469-578-11	FERRITE	1.1µH			
		< COIL >				
L6900	1-412-537-31	INDUCTOR	100µH			
L6902	1-412-525-31	INDUCTOR	10µH			
L6903	1-406-659-11	INDUCTOR	10µH			
		< PHOTOCOUPLER >				
PH6900	8-749-016-81	PHOTOCOUPLER PC123Y22				
		< TRANSISTOR >				
Q6900	8-729-052-29	TRANSISTOR	2SK2876-01MR-F122			
Q6901	8-729-052-29	TRANSISTOR	2SK2876-01MR-F122			
Q6904	8-729-010-05	TRANSISTOR	MSB709-RT1			
Q6905	8-729-010-25	TRANSISTOR	MSD601-RT1			
		< RESISTOR >				
R6902	1-218-869-11	METAL CHIP	8.2K	0.5%	1/10W	
R6903	1-218-837-11	METAL CHIP	390	0.5%	1/10W	
R6904	1-245-478-21	METAL	470K	1%	1/4W	
R6905	1-218-873-11	METAL CHIP	12K	0.5%	1/10W	
R6907	1-245-478-21	METAL	470K	1%	1/4W	
R6908	1-218-823-11	METAL CHIP	100	0.5%	1/10W	
R6909	1-211-795-11	FUSIBLE	470	5%	1/4W	
R6910	1-249-393-11	CARBON	10	5%	1/4W	
R6911	1-249-393-11	CARBON	10	5%	1/4W	
R6912	1-216-833-11	METAL CHIP	10K	5%	1/10W	
R6913	1-216-833-11	METAL CHIP	10K	5%	1/10W	
R6916	1-216-817-11	METAL CHIP	470	5%	1/10W	
R6917	1-216-864-11	SHORT CHIP	0			
R6918	1-220-926-81	FUSIBLE	0.47	10%	1/2W	
R6920	1-216-363-21	METAL OXIDE	0.33	5%	2W	
R6921	1-216-821-11	METAL CHIP	1K	5%	1/10W	
R6922	1-249-393-11	CARBON	10	5%	1/4W	
R6923	1-216-821-11	METAL CHIP	1K	5%	1/10W	
R6924	1-216-864-11	SHORT CHIP	0			
R6925	1-249-393-11	CARBON	10	5%	1/4W	
R6927	1-216-833-11	METAL CHIP	10K	5%	1/10W	
R6931	1-218-877-11	METAL CHIP	18K	0.5%	1/10W	
R6932	1-218-867-11	METAL CHIP	6.8K	0.5%	1/10W	
R6936	1-216-821-11	METAL CHIP	1K	5%	1/10W	
R6937	1-216-849-11	METAL CHIP	220K	5%	1/10W	
R6941	1-216-841-11	METAL CHIP	47K	5%	1/10W	
R6942	1-216-841-11	METAL CHIP	47K	5%	1/10W	
R6943	1-216-809-11	METAL CHIP	100	5%	1/10W	
R6944	1-219-759-11	METAL	1M	5%	1/2W	
		< TRANSFORMER >				
T6900	1-439-879-11	TRANSFORMER, CONVERTER (PIT)				

****

REF. NO.	PART NO.	DESCRIPTION				REMARK
*	A-1405-691-A	H1 BOARD, COMPLETE				
		**********				
		< CAPACITOR >				
C3701	1-164-156-11	CERAMIC CHIP	0.1µF		25V	
C3702	1-162-974-11	CERAMIC CHIP	0.01µF		50V	
C3703	1-164-156-11	CERAMIC CHIP	0.1µF		25V	
C3704	1-124-779-00	ELECT CHIP	10µF	20%	16V	
		< CONNECTOR >				
*CN3701	1-564-520-11	PLUG, CONNECTOR 5P				
		< IC >				
IC3701	8-742-129-00	HYB IC SBX1971-51P				
		< RESISTOR >				
R3702	1-216-864-11	SHORT CHIP	0			
R3703	1-216-837-11	METAL CHIP	22K	5%	1/10W	
R3704	1-216-805-11	METAL CHIP	47	5%	1/10W	
		< SWITCH >				
S3701	1-762-196-21	SWITCH, TACT (POWER)				

****

REF. NO.	PART NO.	DESCRIPTION				REMARK
*	A-1405-690-A	H3 BOARD, COMPLETE				
		**********				
		< CAPACITOR >				
C3901	1-162-970-11	CERAMIC CHIP	0.01µF	10%	25V	
C3902	1-124-779-00	ELECT CHIP	10µF	20%	16V	
C3903	1-115-156-11	CERAMIC CHIP	1µF		10V	
C3904	1-162-974-11	CERAMIC CHIP	0.01µF		50V	
C3905	1-124-779-00	ELECT CHIP	10µF	20%	16V	
C3906	1-162-970-11	CERAMIC CHIP	0.01µF	10%	25V	
C3907	1-124-779-00	ELECT CHIP	10µF	20%	16V	
C3908	1-124-779-00	ELECT CHIP	10µF	20%	16V	
		< CONNECTOR >				
*CN3901	1-564-518-11	PLUG, CONNECTOR 3P				
*CN3902	1-564-518-11	PLUG, CONNECTOR 3P				
CN3903	1-564-528-11	PLUG, CONNECTOR 13P				
		< DIODE >				
D3901	8-719-977-28	DIODE DTZ10B				
D3906	8-719-977-28	DIODE DTZ10B				
D3907	8-719-977-28	DIODE DTZ10B				
D3910	8-719-977-28	DIODE DTZ10B				
D3911	8-719-977-28	DIODE DTZ10B				
		< JACK >				
J3901	1-770-361-11	TERMINAL BLOCK, S (VIDEO 2 IN)				
		< RESISTOR >				
R3901	1-216-864-11	SHORT CHIP	0			

REF. NO.	PART NO.	DESCRIPTION			REMARK
R3902	1-218-684-11	METAL CHIP	470	0.5%	1/10W
R3903	1-218-688-11	METAL CHIP	680	0.5%	1/10W
R3904	1-218-692-11	METAL CHIP	1K	0.5%	1/10W
R3905	1-218-700-11	METAL CHIP	2.2K	0.5%	1/10W
R3907	1-216-864-11	SHORT CHIP	0		
R3908	1-218-684-11	METAL CHIP	470	0.5%	1/10W
R3909	1-218-688-11	METAL CHIP	680	0.5%	1/10W
R3910	1-218-692-11	METAL CHIP	1K	0.5%	1/10W
R3911	1-218-700-11	METAL CHIP	2.2K	0.5%	1/10W
R3912	1-218-708-11	METAL CHIP	4.7K	0.5%	1/10W
R3913	1-218-720-11	METAL CHIP	15K	0.5%	1/10W
R3914	1-218-665-11	METAL CHIP	75	0.5%	1/10W
R3915	1-216-821-11	METAL CHIP	1K	5%	1/10W
R3916	1-218-665-11	METAL CHIP	75	0.5%	1/10W
R3917	1-218-665-11	METAL CHIP	75	0.5%	1/10W
R3918	1-216-849-11	METAL CHIP	220K	5%	1/10W
R3919	1-216-849-11	METAL CHIP	220K	5%	1/10W
R3920	1-216-864-11	SHORT CHIP	0		
R3921	1-216-864-11	SHORT CHIP	0		
R3922	1-216-864-11	SHORT CHIP	0		
R3923	1-216-864-11	SHORT CHIP	0		
R3924	1-216-864-11	SHORT CHIP	0		

< SWITCH >

S3901	1-762-196-21	SWITCH, TACT			
S3902	1-762-196-21	SWITCH, TACT			
S3903	1-762-196-21	SWITCH, TACT			
S3904	1-762-196-21	SWITCH, TACT			
S3905	1-762-196-21	SWITCH, TACT			
S3906	1-762-196-21	SWITCH, TACT			
S3908	1-771-734-11	SWITCH, TACTILE			
S3912	1-762-196-21	SWITCH, TACT			

****

* A-1410-240-A H4 BOARD, COMPLETE
****

< CAPACITOR >

C3951	1-164-156-11	CERAMIC CHIP	0.1μF		25V
C3952	1-162-915-11	CERAMIC CHIP	10pF	0.50pF	50V
C3953	1-162-915-11	CERAMIC CHIP	10pF	0.50pF	50V

< CONNECTOR >

*CN3951	1-564-519-11	PLUG, CONNECTOR 4P

< IC >

IC3951	8-759-442-07	IC LM75CIMX-5

< COIL >

L3951	1-414-754-11	INDUCTOR	10μH

< RESISTOR >

R3951	1-216-801-11	METAL CHIP	22	5%	1/10W
R3952	1-216-801-11	METAL CHIP	22	5%	1/10W
R3953	1-216-864-11	SHORT CHIP	0		
R3954	1-216-833-11	METAL CHIP	10K	5%	1/10W
R3955	1-216-833-11	METAL CHIP	10K	5%	1/10W

****

Due to the complexity of this board, performing component level field repairs is not recommended. If service is required, complete board replacement is the preferred, repair method. Data is provided for reference only.

* A-1302-165-A QH BOARD, COMPLETE
****

< CAPACITOR >

C7203	1-162-910-11	CERAMIC CHIP	5pF	0.25pF	50V
C7204	1-162-911-11	CERAMIC CHIP	6pF	0.50pF	50V
C7205	1-162-970-11	CERAMIC CHIP	0.01μF	10%	25V
C7206	1-162-970-11	CERAMIC CHIP	0.01μF	10%	25V
C7207	1-107-826-11	CERAMIC CHIP	0.1μF	10%	16V
C7208	1-162-970-11	CERAMIC CHIP	0.01μF	10%	25V
C7209	1-125-837-91	CERAMIC CHIP	1μF	10%	6.3V
C7210	1-107-826-11	CERAMIC CHIP	0.1μF	10%	16V
C7211	1-127-760-11	CERAMIC CHIP	4.7μF	10%	6.3V
C7212	1-125-837-91	CERAMIC CHIP	1μF	10%	6.3V
C7213	1-162-970-11	CERAMIC CHIP	0.01μF	10%	25V
C7215	1-164-156-11	CERAMIC CHIP	0.1μF		25V
C7216	1-162-970-11	CERAMIC CHIP	0.01μF	10%	25V
C7217	1-125-837-91	CERAMIC CHIP	1μF	10%	6.3V
C7218	1-164-156-11	CERAMIC CHIP	0.1μF		25V
C7219	1-164-156-11	CERAMIC CHIP	0.1μF		25V
C7220	1-164-156-11	CERAMIC CHIP	0.1μF		25V
C7221	1-164-156-11	CERAMIC CHIP	0.1μF		25V
C7224	1-164-156-11	CERAMIC CHIP	0.1μF		25V

< CONNECTOR >

*CN7201	1-784-010-11	CONNECTOR, USB (B)
CN7202	1-695-915-11	TAB (CONTACT)
*CN7204	1-816-402-12	CONNECTOR, MEMORY STICK

< DIODE >

D7201	8-719-800-76	DIODE 1SS226
D7202	8-719-056-77	DIODE UDZ-TE-17-3.9B
D7210	6-500-182-01	DIODE L1503CB/ID
D7212	8-719-056-77	DIODE UDZ-TE-17-3.9B

< FERRITE BEAD >

FB7201	1-414-921-11	FERRITE	0μH
FB7202	1-414-921-11	FERRITE	0μH
FB7203	1-414-921-11	FERRITE	0μH

< IC >

IC7201	6-703-076-01	IC XC6204B332MR
IC7202	6-704-548-01	IC 90C36LC1B
IC7203	6-704-067-01	IC M24128-BWMN6T(A)

< COIL >

L7201	1-414-394-11	INDUCTOR	2.2μH

< TRANSISTOR >

Q7201	8-729-424-02	TRANSISTOR 2SB709A-QRS-TX
Q7202	8-729-422-27	TRANSISTOR 2SD601A-Q

REF. NO.	PART NO.	DESCRIPTION			REMARK
		< RESISTOR >			
R7201	1-216-864-11	SHORT CHIP	0		
R7202	1-414-228-11	FERRITE	0μH		
R7203	1-216-837-11	METAL CHIP	22K	5%	1/10W
R7204	1-216-809-11	METAL CHIP	100	5%	1/10W
R7206	1-216-857-11	METAL CHIP	1M	5%	1/10W
R7209	1-414-228-11	FERRITE	0μH		
R7210	1-216-803-11	METAL CHIP	33	5%	1/10W
R7211	1-216-821-11	METAL CHIP	1K	5%	1/10W
R7212	1-216-803-11	METAL CHIP	33	5%	1/10W
R7214	1-216-823-11	METAL CHIP	1.5K	5%	1/10W
R7215	1-414-228-11	FERRITE	0μH		
R7216	1-216-821-11	METAL CHIP	1K	5%	1/10W
R7217	1-216-821-11	METAL CHIP	1K	5%	1/10W
R7218	1-218-708-11	METAL CHIP	4.7K	0.5%	1/10W
R7219	1-218-708-11	METAL CHIP	4.7K	0.5%	1/10W
R7221	1-216-821-11	METAL CHIP	1K	5%	1/10W
R7222	1-216-811-11	METAL CHIP	150	5%	1/10W
R7223	1-216-809-11	METAL CHIP	100	5%	1/10W
R7224	1-216-809-11	METAL CHIP	100	5%	1/10W
R7225	1-216-809-11	METAL CHIP	100	5%	1/10W
R7226	1-216-864-11	SHORT CHIP	0		
R7227	1-216-864-11	SHORT CHIP	0		
R7228	1-216-864-11	SHORT CHIP	0		
R7229	1-216-821-11	METAL CHIP	1K	5%	1/10W
R7231	1-216-825-11	METAL CHIP	2.2K	5%	1/10W
		< VIBRATOR >			
X7201	1-760-965-21	VIBRATOR, CRYSTAL			

****

Due to the complexity of this board, performing component level field repairs is not recommended. If it is determined that this board has malfunctioned, the Complete Q Box Assembly (P/N A-1606-037-B) must be replaced.
Data is provided for reference only.

*	A-1302-164-B	QI BOARD, COMPLETE			
		**********			
	4-088-898-01	CARTON			
		< CAPACITOR >			
C601	1-165-845-21	TANTAL. CHIP	47μF	20%	6.3V
C602	1-164-156-11	CERAMIC CHIP	0.1μF		25V
C603	1-165-845-21	TANTAL. CHIP	47μF	20%	6.3V
C604	1-165-989-11	CERAMIC CHIP	10μF	10%	6.3V
C605	1-165-845-21	TANTAL. CHIP	47μF	20%	6.3V
C606	1-164-156-11	CERAMIC CHIP	0.1μF		25V
C607	1-162-974-11	CERAMIC CHIP	0.01μF		50V
C608	1-164-156-11	CERAMIC CHIP	0.1μF		25V
C609	1-100-566-91	CERAMIC CHIP	0.1μF	10%	25V
C610	1-164-156-11	CERAMIC CHIP	0.1μF		25V
C611	1-164-156-11	CERAMIC CHIP	0.1μF		25V
C612	1-164-156-11	CERAMIC CHIP	0.1μF		25V
C613	1-164-156-11	CERAMIC CHIP	0.1μF		25V
C614	1-100-566-91	CERAMIC CHIP	0.1μF	10%	25V
C615	1-164-156-11	CERAMIC CHIP	0.1μF		25V
C616	1-164-156-11	CERAMIC CHIP	0.1μF		25V
C617	1-164-156-11	CERAMIC CHIP	0.1μF		25V
C618	1-164-156-11	CERAMIC CHIP	0.1μF		25V
C619	1-164-156-11	CERAMIC CHIP	0.1μF		25V
C620	1-164-156-11	CERAMIC CHIP	0.1μF		25V
C621	1-165-989-11	CERAMIC CHIP	10μF	10%	6.3V
C702	1-164-156-11	CERAMIC CHIP	0.1μF		25V
C703	1-164-156-11	CERAMIC CHIP	0.1μF		25V
C704	1-164-156-11	CERAMIC CHIP	0.1μF		25V
C705	1-164-156-11	CERAMIC CHIP	0.1μF		25V
C706	1-164-156-11	CERAMIC CHIP	0.1μF		25V
C707	1-164-156-11	CERAMIC CHIP	0.1μF		25V
C708	1-164-156-11	CERAMIC CHIP	0.1μF		25V
C709	1-162-915-11	CERAMIC CHIP	10pF	0.50pF	50V
C710	1-162-915-11	CERAMIC CHIP	10pF	0.50pF	50V
C711	1-162-915-11	CERAMIC CHIP	10pF	0.50pF	50V
C712	1-162-915-11	CERAMIC CHIP	10pF	0.50pF	50V
C713	1-162-915-11	CERAMIC CHIP	10pF	0.50pF	50V
C714	1-162-915-11	CERAMIC CHIP	10pF	0.50pF	50V
C715	1-162-915-11	CERAMIC CHIP	10pF	0.50pF	50V
C716	1-162-915-11	CERAMIC CHIP	10pF	0.50pF	50V
C717	1-162-915-11	CERAMIC CHIP	10pF	0.50pF	50V
C718	1-162-915-11	CERAMIC CHIP	10pF	0.50pF	50V
C719	1-162-915-11	CERAMIC CHIP	10pF	0.50pF	50V
C720	1-162-915-11	CERAMIC CHIP	10pF	0.50pF	50V
C721	1-162-915-11	CERAMIC CHIP	10pF	0.50pF	50V
C722	1-162-915-11	CERAMIC CHIP	10pF	0.50pF	50V
C723	1-162-915-11	CERAMIC CHIP	10pF	0.50pF	50V
C724	1-162-915-11	CERAMIC CHIP	10pF	0.50pF	50V
C725	1-162-964-11	CERAMIC CHIP	0.001μF	10%	50V
C726	1-107-826-11	CERAMIC CHIP	0.1μF	10%	16V
C727	1-162-974-11	CERAMIC CHIP	0.01μF		50V
C728	1-164-156-11	CERAMIC CHIP	0.1μF		25V
C729	1-164-156-11	CERAMIC CHIP	0.1μF		25V
C730	1-162-974-11	CERAMIC CHIP	0.01μF		50V
C731	1-162-915-11	CERAMIC CHIP	10pF	0.50pF	50V
C732	1-162-974-11	CERAMIC CHIP	0.01μF		50V
C733	1-162-915-11	CERAMIC CHIP	10pF	0.50pF	50V
C734	1-165-989-11	CERAMIC CHIP	10μF	10%	6.3V
C735	1-165-989-11	CERAMIC CHIP	10μF	10%	6.3V
C736	1-162-974-11	CERAMIC CHIP	0.01μF		50V
C737	1-162-970-11	CERAMIC CHIP	0.01μF	10%	25V
C738	1-164-156-11	CERAMIC CHIP	0.1μF		25V
C739	1-115-416-11	CERAMIC CHIP	0.001μF	5%	25V
C740	1-115-416-11	CERAMIC CHIP	0.001μF	5%	25V
C741	1-115-416-11	CERAMIC CHIP	0.001μF	5%	25V
C742	1-125-838-11	CERAMIC CHIP	2.2μF	10%	6.3V
C743	1-125-838-11	CERAMIC CHIP	2.2μF	10%	6.3V
C744	1-125-838-11	CERAMIC CHIP	2.2μF	10%	6.3V
C745	1-164-388-91	CERAMIC CHIP	270pF	5%	50V
C746	1-164-156-11	CERAMIC CHIP	0.1μF		25V
C747	1-164-388-91	CERAMIC CHIP	270pF	5%	50V
C748	1-164-156-11	CERAMIC CHIP	0.1μF		25V
C749	1-164-388-91	CERAMIC CHIP	270pF	5%	50V
C750	1-164-156-11	CERAMIC CHIP	0.1μF		25V
C803	1-164-156-11	CERAMIC CHIP	0.1μF		25V
C804	1-164-156-11	CERAMIC CHIP	0.1μF		25V
C805	1-164-156-11	CERAMIC CHIP	0.1μF		25V
C806	1-164-156-11	CERAMIC CHIP	0.1μF		25V
C807	1-164-156-11	CERAMIC CHIP	0.1μF		25V
C808	1-164-156-11	CERAMIC CHIP	0.1μF		25V
C809	1-164-156-11	CERAMIC CHIP	0.1μF		25V
C810	1-164-156-11	CERAMIC CHIP	0.1μF		25V
C811	1-164-156-11	CERAMIC CHIP	0.1μF		25V
C812	1-164-156-11	CERAMIC CHIP	0.1μF		25V
C813	1-164-156-11	CERAMIC CHIP	0.1μF		25V

REF. NO.	PART NO.	DESCRIPTION			REMARK
C814	1-164-156-11	CERAMIC CHIP	0.1μF		25V
C815	1-164-156-11	CERAMIC CHIP	0.1μF		25V
C816	1-164-156-11	CERAMIC CHIP	0.1μF		25V
C817	1-164-156-11	CERAMIC CHIP	0.1μF		25V
C818	1-164-156-11	CERAMIC CHIP	0.1μF		25V
C819	1-165-989-11	CERAMIC CHIP	10μF	10%	6.3V
C820	1-165-989-11	CERAMIC CHIP	10μF	10%	6.3V
C821	1-162-974-11	CERAMIC CHIP	0.01μF		50V
C822	1-164-156-11	CERAMIC CHIP	0.1μF		25V
C823	1-162-974-11	CERAMIC CHIP	0.01μF		50V
C824	1-125-837-91	CERAMIC CHIP	1μF	10%	6.3V
C825	1-164-156-11	CERAMIC CHIP	0.1μF		25V
C826	1-164-156-11	CERAMIC CHIP	0.1μF		25V
C828	1-164-156-11	CERAMIC CHIP	0.1μF		25V
C829	1-162-927-11	CERAMIC CHIP	100pF	5%	50V
C830	1-162-927-11	CERAMIC CHIP	100pF	5%	50V
C832	1-162-971-11	CERAMIC CHIP	0.001μF	10%	50V
C833	1-162-927-11	CERAMIC CHIP	100pF	5%	50V
C834	1-162-927-11	CERAMIC CHIP	100pF	5%	50V
C835	1-164-156-11	CERAMIC CHIP	0.1μF		25V
C836	1-164-156-11	CERAMIC CHIP	0.1μF		25V
C837	1-107-826-11	CERAMIC CHIP	0.1μF	10%	16V
C838	1-164-156-11	CERAMIC CHIP	0.1μF		25V
C839	1-164-156-11	CERAMIC CHIP	0.1μF		25V
C840	1-107-826-11	CERAMIC CHIP	0.1μF	10%	16V
C841	1-107-826-11	CERAMIC CHIP	0.1μF	10%	16V

< CONNECTOR >

* CN602	1-817-738-11	CONNECTOR, BOARD TO BOARD 80P	
* CN701	1-817-737-11	CONNECTOR, BOARD TO BOARD 40P	
CN702	1-815-033-21	CONNECTOR, I LINK(FLANGE TYPE)	
* CN703	1-815-164-21	CONNECTOR, I LINK(FLANGE TYPE)	
* CN704	1-815-164-21	CONNECTOR, I LINK(FLANGE TYPE)	

< DIODE >

D701	8-719-421-71	DIODE	MA132WA
D702	8-719-421-71	DIODE	MA132WA
D703	8-719-421-71	DIODE	MA132WA

< FERRITE BEAD >

FB601	1-469-835-21	FERRITE	0μH
FB602	1-469-835-21	FERRITE	0μH
FB801	1-469-835-21	FERRITE	0μH
FB802	1-469-835-21	FERRITE	0μH

< IC >

IC601	6-702-958-01	IC	CXD9740GA
IC602	8-759-832-05	IC	BA18BC0FP-E2
IC703	6-702-511-11	IC	MT48LC8M16A2TG-75-Y95WT
IC704	6-704-487-01	IC	TC74LVX74FT(EL)
IC802	6-704-488-01	IC	μPD72894GD-LML-A
IC803	8-759-031-84	IC	SC7S04F
IC804	8-759-031-84	IC	SC7S04F
IC805	6-702-552-01	IC	BU2374FV-E2
IC807	6-703-791-01	IC	MSM56V16160F-8T3FM1
IC808	6-704-487-01	IC	TC74LVX74FT(EL)

< COIL >

REF. NO.	PART NO.	DESCRIPTION		REMARK
L601	1-414-394-11	INDUCTOR	2.2μH	
L701	1-414-394-11	INDUCTOR	2.2μH	
L702	1-216-296-11	SHORT CHIP	0	
L703	1-781-667-22	INDUCTOR	0μH	
L704	1-781-667-22	INDUCTOR	0μH	
L705	1-781-667-22	INDUCTOR	0μH	
L706	1-781-667-22	INDUCTOR	0μH	
L707	1-781-667-22	INDUCTOR	0μH	
L708	1-781-667-22	INDUCTOR	0μH	
L801	1-414-394-11	INDUCTOR	2.2μH	

< RESISTOR >

R601	1-216-801-11	METAL CHIP	22	5%	1/10W
R602	1-216-801-11	METAL CHIP	22	5%	1/10W
R603	1-216-801-11	METAL CHIP	22	5%	1/10W
R604	1-216-801-11	METAL CHIP	22	5%	1/10W
R605	1-216-801-11	METAL CHIP	22	5%	1/10W
R606	1-216-801-11	METAL CHIP	22	5%	1/10W
R607	1-216-801-11	METAL CHIP	22	5%	1/10W
R608	1-216-845-11	METAL CHIP	100K	5%	1/10W
R609	1-216-833-11	METAL CHIP	10K	5%	1/10W
R610	1-216-833-11	METAL CHIP	10K	5%	1/10W
R611	1-216-833-11	METAL CHIP	10K	5%	1/10W
R612	1-216-833-11	METAL CHIP	10K	5%	1/10W
R613	1-216-833-11	METAL CHIP	10K	5%	1/10W
R614	1-216-845-11	METAL CHIP	100K	5%	1/10W
R616	1-216-845-11	METAL CHIP	100K	5%	1/10W
R617	1-216-833-11	METAL CHIP	10K	5%	1/10W
R618	1-216-833-11	METAL CHIP	10K	5%	1/10W
R619	1-216-864-11	SHORT CHIP	0		
R620	1-216-864-11	SHORT CHIP	0		
R621	1-216-833-11	METAL CHIP	10K	5%	1/10W
R622	1-216-833-11	METAL CHIP	10K	5%	1/10W
R623	1-216-833-11	METAL CHIP	10K	5%	1/10W
R624	1-216-833-11	METAL CHIP	10K	5%	1/10W
R625	1-216-833-11	METAL CHIP	10K	5%	1/10W
R627	1-216-833-11	METAL CHIP	10K	5%	1/10W
R701	1-216-833-11	METAL CHIP	10K	5%	1/10W
R702	1-216-801-11	METAL CHIP	22	5%	1/10W
R704	1-216-801-11	METAL CHIP	22	5%	1/10W
R707	1-216-801-11	METAL CHIP	22	5%	1/10W
R708	1-218-672-11	METAL CHIP	150	0.5%	1/10W
R709	1-216-801-11	METAL CHIP	22	5%	1/10W
R710	1-218-711-11	METAL CHIP	6.2K	0.5%	1/10W
R711	1-216-801-11	METAL CHIP	22	5%	1/10W
R712	1-216-801-11	METAL CHIP	22	5%	1/10W
R713	1-216-801-11	METAL CHIP	22	5%	1/10W
R714	1-218-662-11	METAL CHIP	56	0.5%	1/10W
R715	1-218-662-11	METAL CHIP	56	0.5%	1/10W
R716	1-218-662-11	METAL CHIP	56	0.5%	1/10W
R717	1-218-662-11	METAL CHIP	56	0.5%	1/10W
R719	1-218-662-11	METAL CHIP	56	0.5%	1/10W
R721	1-218-662-11	METAL CHIP	56	0.5%	1/10W
R723	1-216-857-11	METAL CHIP	1M	5%	1/10W
R724	1-216-857-11	METAL CHIP	1M	5%	1/10W
R725	1-216-857-11	METAL CHIP	1M	5%	1/10W
R726	1-218-662-11	METAL CHIP	56	0.5%	1/10W
R727	1-218-662-11	METAL CHIP	56	0.5%	1/10W
R728	1-218-662-11	METAL CHIP	56	0.5%	1/10W
R729	1-218-662-11	METAL CHIP	56	0.5%	1/10W
R730	1-218-709-11	METAL CHIP	5.1K	0.5%	1/10W
R731	1-218-662-11	METAL CHIP	56	0.5%	1/10W
R732	1-218-709-11	METAL CHIP	5.1K	0.5%	1/10W
R733	1-218-662-11	METAL CHIP	56	0.5%	1/10W

REF. NO.	PART NO.	DESCRIPTION			REMARK
R734	1-218-709-11	METAL CHIP	5.1K	0.5%	1/10W
R735	1-216-864-11	SHORT CHIP	0		
R736	1-216-864-11	SHORT CHIP	0		
R737	1-216-864-11	SHORT CHIP	0		
R801	1-216-833-11	METAL CHIP	10K	5%	1/10W
R802	1-216-833-11	METAL CHIP	10K	5%	1/10W
R803	1-216-833-11	METAL CHIP	10K	5%	1/10W
R804	1-216-833-11	METAL CHIP	10K	5%	1/10W
R805	1-216-864-11	SHORT CHIP	0		
R806	1-216-833-11	METAL CHIP	10K	5%	1/10W
R807	1-216-833-11	METAL CHIP	10K	5%	1/10W
R808	1-216-833-11	METAL CHIP	10K	5%	1/10W
R809	1-216-833-11	METAL CHIP	10K	5%	1/10W
R810	1-216-809-11	METAL CHIP	100	5%	1/10W
R811	1-216-833-11	METAL CHIP	10K	5%	1/10W
R812	1-216-864-11	SHORT CHIP	0		
R813	1-216-833-11	METAL CHIP	10K	5%	1/10W
R814	1-216-833-11	METAL CHIP	10K	5%	1/10W
R815	1-216-833-11	METAL CHIP	10K	5%	1/10W
R816	1-216-803-11	METAL CHIP	33	5%	1/10W
R817	1-216-833-11	METAL CHIP	10K	5%	1/10W
R818	1-216-801-11	METAL CHIP	22	5%	1/10W
R820	1-216-803-11	METAL CHIP	33	5%	1/10W
R821	1-218-699-11	METAL CHIP	2K	0.5%	1/10W
R822	1-216-803-11	METAL CHIP	33	5%	1/10W
R823	1-216-841-11	METAL CHIP	47K	5%	1/10W
R824	1-216-833-11	METAL CHIP	10K	5%	1/10W
R825	1-216-841-11	METAL CHIP	47K	5%	1/10W
R826	1-216-841-11	METAL CHIP	47K	5%	1/10W

< NETWORK RESISTOR >

RB601	1-234-370-21	RES, NETWORK 22X4 (1005)	
RB602	1-234-370-21	RES, NETWORK 22X4 (1005)	
RB603	1-234-370-21	RES, NETWORK 22X4 (1005)	
RB604	1-234-370-21	RES, NETWORK 22X4 (1005)	
RB605	1-234-370-21	RES, NETWORK 22X4 (1005)	
RB606	1-234-370-21	RES, NETWORK 22X4 (1005)	
RB607	1-234-370-21	RES, NETWORK 22X4 (1005)	
RB608	1-234-370-21	RES, NETWORK 22X4 (1005)	
RB609	1-234-370-21	RES, NETWORK 22X4 (1005)	
RB610	1-234-378-21	RES, NETWORK 10KX4 (1005)	
RB611	1-234-378-21	RES, NETWORK 10KX4 (1005)	
RB612	1-234-378-21	RES, NETWORK 10KX4 (1005)	
RB613	1-234-378-21	RES, NETWORK 10KX4 (1005)	
RB614	1-234-378-21	RES, NETWORK 10KX4 (1005)	
RB701	1-234-370-21	RES, NETWORK 22X4 (1005)	
RB702	1-234-370-21	RES, NETWORK 22X4 (1005)	
RB703	1-234-370-21	RES, NETWORK 22X4 (1005)	
RB704	1-234-370-21	RES, NETWORK 22X4 (1005)	
RB705	1-234-378-21	RES, NETWORK 10KX4 (1005)	
RB706	1-234-378-21	RES, NETWORK 10KX4 (1005)	
RB707	1-234-378-21	RES, NETWORK 10KX4 (1005)	
RB708	1-234-378-21	RES, NETWORK 10KX4 (1005)	
RB709	1-234-371-21	RES, NETWORK 47X4 (1005)	
RB710	1-234-371-21	RES, NETWORK 47X4 (1005)	
RB711	1-234-371-21	RES, NETWORK 47X4 (1005)	
RB712	1-234-371-21	RES, NETWORK 47X4 (1005)	
RB713	1-234-378-21	RES, NETWORK 10KX4 (1005)	
RB714	1-234-378-21	RES, NETWORK 10KX4 (1005)	
RB715	1-234-378-21	RES, NETWORK 10KX4 (1005)	
RB716	1-234-378-21	RES, NETWORK 10KX4 (1005)	
RB801	1-234-378-21	RES, NETWORK 10KX4 (1005)	
RB802	1-234-378-21	RES, NETWORK 10KX4 (1005)	
RB803	1-234-378-21	RES, NETWORK 10KX4 (1005)	
RB804	1-234-378-21	RES, NETWORK 10KX4 (1005)	
RB814	1-234-378-21	RES, NETWORK 10KX4 (1005)	
RB815	1-234-378-21	RES, NETWORK 10KX4 (1005)	
RB816	1-234-378-21	RES, NETWORK 10KX4 (1005)	
RB817	1-234-378-21	RES, NETWORK 10KX4 (1005)	
RB818	1-234-378-21	RES, NETWORK 10KX4 (1005)	
RB819	1-234-378-21	RES, NETWORK 10KX4 (1005)	
RB820	1-234-378-21	RES, NETWORK 10KX4 (1005)	
RB821	1-234-378-21	RES, NETWORK 10KX4 (1005)	
RB822	1-234-378-21	RES, NETWORK 10KX4 (1005)	
RB823	1-234-378-21	RES, NETWORK 10KX4 (1005)	
RB824	1-234-378-21	RES, NETWORK 10KX4 (1005)	
RB825	1-234-378-21	RES, NETWORK 10KX4 (1005)	
RB826	1-234-372-21	RES, NETWORK 100X4 (1005)	
RB827	1-234-372-21	RES, NETWORK 100X4 (1005)	
RB828	1-234-378-21	RES, NETWORK 10KX4 (1005)	
RB829	1-234-378-21	RES, NETWORK 10KX4 (1005)	
RB830	1-234-372-21	RES, NETWORK 100X4 (1005)	
RB831	1-234-372-21	RES, NETWORK 100X4 (1005)	
RB832	1-234-372-21	RES, NETWORK 100X4 (1005)	
RB833	1-234-372-21	RES, NETWORK 100X4 (1005)	
RB834	1-234-372-21	RES, NETWORK 100X4 (1005)	
RB835	1-234-372-21	RES, NETWORK 100X4 (1005)	
RB836	1-234-372-21	RES, NETWORK 100X4 (1005)	
RB837	1-234-372-21	RES, NETWORK 100X4 (1005)	
RB838	1-234-372-21	RES, NETWORK 100X4 (1005)	
RB839	1-234-378-21	RES, NETWORK 10KX4 (1005)	
RB840	1-234-378-21	RES, NETWORK 10KX4 (1005)	
RB841	1-234-378-21	RES, NETWORK 10KX4 (1005)	
RB842	1-234-378-21	RES, NETWORK 10KX4 (1005)	

< VIBRATOR >

X701	1-795-415-21	VIBRATOR, CRYSTAL
X801	1-813-058-21	OSCILLATOR, CRYSTAL

****

Due to the complexity of this board, performing component level field repairs is not recommended. If it is determined that this board has malfunctioned, the Complete Q Box Assembly (P/N A-1606-037-B) must be replaced.
Data is provided for reference only.

* A-1302-554-A QM BOARD, COMPLETE
****

< CAPACITOR >

C7301	1-165-811-91	CERAMIC CHIP	22µF	10%	16V
C7302	1-164-346-11	CERAMIC CHIP	1µF		16V
C7303	1-164-346-11	CERAMIC CHIP	1µF		16V
C7304	1-125-827-91	CERAMIC CHIP	1µF	10%	25V
C7305	1-162-970-11	CERAMIC CHIP	0.01µF	10%	25V
C7306	1-107-826-11	CERAMIC CHIP	0.1µF	10%	16V
C7307	1-125-827-91	CERAMIC CHIP	1µF	10%	25V
C7308	1-162-970-11	CERAMIC CHIP	0.01µF	10%	25V
C7309	1-107-826-11	CERAMIC CHIP	0.1µF	10%	16V
C7310	1-164-156-11	CERAMIC CHIP	0.1µF		25V
C7311	1-164-156-11	CERAMIC CHIP	0.1µF		25V
C7312	1-164-156-11	CERAMIC CHIP	0.1µF		25V
C7313	1-164-346-11	CERAMIC CHIP	1µF		16V
C7314	1-164-156-11	CERAMIC CHIP	0.1µF		25V

REF. NO.	PART NO.	DESCRIPTION			REMARK
C7315	1-164-346-11	CERAMIC CHIP	1μF		16V
C7316	1-162-962-11	CERAMIC CHIP	470pF	10%	50V
C7317	1-162-962-11	CERAMIC CHIP	470pF	10%	50V
C7318	1-100-118-21	ELECT CHIP	82pF	20%	16V
C7319	1-126-206-11	ELECT CHIP	100μF	20%	6.3V
C7320	1-100-118-21	ELECT CHIP	82pF	20%	16V
C7321	1-164-156-11	CERAMIC CHIP	0.1μF		25V
C7322	1-137-897-21	ELECT CHIP	150μF	20%	4V
C7323	1-137-897-21	ELECT CHIP	150μF	20%	4V
C7326	1-137-897-21	ELECT CHIP	150μF	20%	4V
C7327	1-125-837-91	CERAMIC CHIP	1μF	10%	6.3V
C7328	1-125-837-91	CERAMIC CHIP	1μF	10%	6.3V
C7329	1-126-206-11	ELECT CHIP	100μF	20%	6.3V
C7330	1-126-206-11	ELECT CHIP	100μF	20%	6.3V
C7331	1-126-206-11	ELECT CHIP	100μF	20%	6.3V
C7332	1-164-156-11	CERAMIC CHIP	0.1μF		25V
C7333	1-164-156-11	CERAMIC CHIP	0.1μF		25V
C7334	1-164-156-11	CERAMIC CHIP	0.1μF		25V
C7335	1-127-692-11	CERAMIC CHIP	10μF	10%	16V
C7336	1-127-692-11	CERAMIC CHIP	10μF	10%	16V
C7337	1-107-826-11	CERAMIC CHIP	0.1μF	10%	16V
C7338	1-107-826-11	CERAMIC CHIP	0.1μF	10%	16V
C7339	1-107-826-11	CERAMIC CHIP	0.1μF	10%	16V
C7340	1-107-826-11	CERAMIC CHIP	0.1μF	10%	16V
C7341	1-107-826-11	CERAMIC CHIP	0.1μF	10%	16V
C7342	1-126-206-11	ELECT CHIP	100μF	20%	6.3V
C7343	1-125-837-91	CERAMIC CHIP	1μF	10%	6.3V
C7344	1-125-837-91	CERAMIC CHIP	1μF	10%	6.3V
C7345	1-125-837-91	CERAMIC CHIP	1μF	10%	6.3V
C7346	1-125-837-91	CERAMIC CHIP	1μF	10%	6.3V
C7347	1-125-837-91	CERAMIC CHIP	1μF	10%	6.3V
C7348	1-127-692-11	CERAMIC CHIP	10μF	10%	16V
C7349	1-164-156-11	CERAMIC CHIP	0.1μF		25V
C7350	1-127-692-11	CERAMIC CHIP	10μF	10%	16V
C7351	1-162-970-11	CERAMIC CHIP	0.01μF	10%	25V
C7352	1-162-970-11	CERAMIC CHIP	0.01μF	10%	25V
C7353	1-162-970-11	CERAMIC CHIP	0.01μF	10%	25V
C7354	1-127-692-11	CERAMIC CHIP	10μF	10%	16V
C7355	1-164-156-11	CERAMIC CHIP	0.1μF		25V
C7356	1-127-692-11	CERAMIC CHIP	10μF	10%	16V
C7357	1-164-156-11	CERAMIC CHIP	0.1μF		25V
C7358	1-164-156-11	CERAMIC CHIP	0.1μF		25V
C7359	1-164-156-11	CERAMIC CHIP	0.1μF		25V
C7360	1-164-156-11	CERAMIC CHIP	0.1μF		25V
C7361	1-164-156-11	CERAMIC CHIP	0.1μF		25V
C7362	1-164-156-11	CERAMIC CHIP	0.1μF		25V
C7363	1-164-156-11	CERAMIC CHIP	0.1μF		25V
C7364	1-164-156-11	CERAMIC CHIP	0.1μF		25V
C7365	1-125-837-91	CERAMIC CHIP	1μF	10%	6.3V
C7366	1-127-692-11	CERAMIC CHIP	10μF	10%	16V
C7367	1-127-692-11	CERAMIC CHIP	10μF	10%	16V
C7368	1-127-692-11	CERAMIC CHIP	10μF	10%	16V
C7369	1-127-692-11	CERAMIC CHIP	10μF	10%	16V
C7370	1-127-692-11	CERAMIC CHIP	10μF	10%	16V
C7371	1-127-692-11	CERAMIC CHIP	10μF	10%	16V
C7372	1-162-970-11	CERAMIC CHIP	0.01μF	10%	25V
C7373	1-162-970-11	CERAMIC CHIP	0.01μF	10%	25V
C7374	1-162-970-11	CERAMIC CHIP	0.01μF	10%	25V
C7375	1-164-156-11	CERAMIC CHIP	0.1μF		25V
C7376	1-164-156-11	CERAMIC CHIP	0.1μF		25V
C7377	1-164-156-11	CERAMIC CHIP	0.1μF		25V
C7378	1-164-156-11	CERAMIC CHIP	0.1μF		25V
C7379	1-125-837-91	CERAMIC CHIP	1μF	10%	6.3V

REF. NO.	PART NO.	DESCRIPTION			REMARK
C7380	1-164-156-11	CERAMIC CHIP	0.1μF		25V
C7381	1-164-156-11	CERAMIC CHIP	0.1μF		25V
C7382	1-164-156-11	CERAMIC CHIP	0.1μF		25V
C7383	1-164-156-11	CERAMIC CHIP	0.1μF		25V
C7384	1-125-837-91	CERAMIC CHIP	1μF	10%	6.3V
C7385	1-125-837-91	CERAMIC CHIP	1μF	10%	6.3V
C7386	1-125-837-91	CERAMIC CHIP	1μF	10%	6.3V
C7387	1-164-156-11	CERAMIC CHIP	0.1μF		25V
C7388	1-127-692-11	CERAMIC CHIP	10μF	10%	16V
C7389	1-162-970-11	CERAMIC CHIP	0.01μF	10%	25V
C7390	1-162-970-11	CERAMIC CHIP	0.01μF	10%	25V
C7391	1-127-692-11	CERAMIC CHIP	10μF	10%	16V
C7392	1-164-156-11	CERAMIC CHIP	0.1μF		25V
C7393	1-164-156-11	CERAMIC CHIP	0.1μF		25V
C7394	1-127-692-11	CERAMIC CHIP	10μF	10%	16V
C7395	1-164-156-11	CERAMIC CHIP	0.1μF		25V
C7396	1-164-156-11	CERAMIC CHIP	0.1μF		25V
C7397	1-127-692-11	CERAMIC CHIP	10μF	10%	16V
C7398	1-164-156-11	CERAMIC CHIP	0.1μF		25V
C7399	1-125-837-91	CERAMIC CHIP	1μF	10%	6.3V
C7400	1-162-910-11	CERAMIC CHIP	5pF	0.25pF	50V
C7401	1-164-156-11	CERAMIC CHIP	0.1μF		25V
C7402	1-164-156-11	CERAMIC CHIP	0.1μF		25V
C7403	1-164-156-11	CERAMIC CHIP	0.1μF		25V
C7404	1-162-911-11	CERAMIC CHIP	6pF	0.50pF	50V
C7405	1-164-156-11	CERAMIC CHIP	0.1μF		25V
C7406	1-164-156-11	CERAMIC CHIP	0.1μF		25V
C7407	1-162-970-11	CERAMIC CHIP	0.01μF	10%	25V
C7408	1-162-970-11	CERAMIC CHIP	0.01μF	10%	25V
C7409	1-164-156-11	CERAMIC CHIP	0.1μF		25V
C7410	1-164-156-11	CERAMIC CHIP	0.1μF		25V
C7411	1-164-156-11	CERAMIC CHIP	0.1μF		25V
C7412	1-164-156-11	CERAMIC CHIP	0.1μF		25V
C7413	1-125-837-91	CERAMIC CHIP	1μF	10%	6.3V
C7414	1-164-156-11	CERAMIC CHIP	0.1μF		25V
C7415	1-125-837-91	CERAMIC CHIP	1μF	10%	6.3V
C7416	1-125-837-91	CERAMIC CHIP	1μF	10%	6.3V
C7417	1-127-692-11	CERAMIC CHIP	10μF	10%	16V
C7418	1-125-837-91	CERAMIC CHIP	1μF	10%	6.3V
C7419	1-127-692-11	CERAMIC CHIP	10μF	10%	16V
C7420	1-164-156-11	CERAMIC CHIP	0.1μF		25V
C7421	1-164-156-11	CERAMIC CHIP	0.1μF		25V
C7422	1-164-156-11	CERAMIC CHIP	0.1μF		25V
C7423	1-164-156-11	CERAMIC CHIP	0.1μF		25V
C7424	1-164-156-11	CERAMIC CHIP	0.1μF		25V
C7425	1-164-156-11	CERAMIC CHIP	0.1μF		25V
C7426	1-164-156-11	CERAMIC CHIP	0.1μF		25V
C7428	1-126-206-11	ELECT CHIP	100μF	20%	6.3V
C7429	1-126-206-11	ELECT CHIP	100μF	20%	6.3V
C7430	1-164-156-11	CERAMIC CHIP	0.1μF		25V
C7431	1-164-156-11	CERAMIC CHIP	0.1μF		25V
C7432	1-127-692-11	CERAMIC CHIP	10μF	10%	16V
C7433	1-162-970-11	CERAMIC CHIP	0.01μF	10%	25V
C7434	1-162-970-11	CERAMIC CHIP	0.01μF	10%	25V
C7435	1-162-970-11	CERAMIC CHIP	0.01μF	10%	25V
C7436	1-162-970-11	CERAMIC CHIP	0.01μF	10%	25V
C7437	1-164-156-11	CERAMIC CHIP	0.1μF		25V
C7438	1-164-156-11	CERAMIC CHIP	0.1μF		25V
C7439	1-127-692-11	CERAMIC CHIP	10μF	10%	16V
C7440	1-162-970-11	CERAMIC CHIP	0.01μF	10%	25V
C7441	1-162-970-11	CERAMIC CHIP	0.01μF	10%	25V
C7442	1-162-970-11	CERAMIC CHIP	0.01μF	10%	25V
C7443	1-162-970-11	CERAMIC CHIP	0.01μF	10%	25V

REF. NO.	PART NO.	DESCRIPTION			REMARK
C7444	1-164-156-11	CERAMIC CHIP	0.1µF		25V
C7445	1-162-970-11	CERAMIC CHIP	0.01µF	10%	25V
C7446	1-162-970-11	CERAMIC CHIP	0.01µF	10%	25V
C7447	1-162-970-11	CERAMIC CHIP	0.01µF	10%	25V
C7448	1-162-970-11	CERAMIC CHIP	0.01µF	10%	25V
C7449	1-164-156-11	CERAMIC CHIP	0.1µF		25V
C7450	1-164-156-11	CERAMIC CHIP	0.1µF		25V
C7451	1-164-156-11	CERAMIC CHIP	0.1µF		25V
C7452	1-127-692-11	CERAMIC CHIP	10µF	10%	16V
C7453	1-162-970-11	CERAMIC CHIP	0.01µF	10%	25V
C7454	1-162-970-11	CERAMIC CHIP	0.01µF	10%	25V
C7455	1-162-970-11	CERAMIC CHIP	0.01µF	10%	25V
C7456	1-162-970-11	CERAMIC CHIP	0.01µF	10%	25V
C7457	1-164-156-11	CERAMIC CHIP	0.1µF		25V
C7458	1-164-156-11	CERAMIC CHIP	0.1µF		25V
C7459	1-127-692-11	CERAMIC CHIP	10µF	10%	16V
C7460	1-162-970-11	CERAMIC CHIP	0.01µF	10%	25V
C7461	1-162-970-11	CERAMIC CHIP	0.01µF	10%	25V
C7462	1-162-970-11	CERAMIC CHIP	0.01µF	10%	25V
C7463	1-162-970-11	CERAMIC CHIP	0.01µF	10%	25V
C7464	1-164-156-11	CERAMIC CHIP	0.1µF		25V
C7465	1-162-970-11	CERAMIC CHIP	0.01µF	10%	25V
C7466	1-162-970-11	CERAMIC CHIP	0.01µF	10%	25V
C7467	1-162-970-11	CERAMIC CHIP	0.01µF	10%	25V
C7468	1-162-970-11	CERAMIC CHIP	0.01µF	10%	25V
C7469	1-164-156-11	CERAMIC CHIP	0.1µF		25V
C7470	1-164-156-11	CERAMIC CHIP	0.1µF		25V
C7472	1-164-156-11	CERAMIC CHIP	0.1µF		25V
C7473	1-126-206-11	ELECT CHIP	100µF	20%	6.3V
C7474	1-126-206-11	ELECT CHIP	100µF	20%	6.3V
C7475	1-126-204-11	ELECT CHIP	47µF	20%	16V
C7476	1-162-923-11	CERAMIC CHIP	47pF	5%	50V
C7477	1-162-923-11	CERAMIC CHIP	47pF	5%	50V
C7478	1-162-923-11	CERAMIC CHIP	47pF	5%	50V
C7479	1-162-923-11	CERAMIC CHIP	47pF	5%	50V
C7480	1-162-923-11	CERAMIC CHIP	47pF	5%	50V
C7481	1-162-923-11	CERAMIC CHIP	47pF	5%	50V
C7482	1-162-974-11	CERAMIC CHIP	0.01µF		50V
C7483	1-164-346-11	CERAMIC CHIP	1µF		16V
C7484	1-162-923-11	CERAMIC CHIP	47pF	5%	50V
C7485	1-162-923-11	CERAMIC CHIP	47pF	5%	50V
C7486	1-162-923-11	CERAMIC CHIP	47pF	5%	50V
C7487	1-162-923-11	CERAMIC CHIP	47pF	5%	50V
C7488	1-162-923-11	CERAMIC CHIP	47pF	5%	50V
C7489	1-162-923-11	CERAMIC CHIP	47pF	5%	50V
C7491	1-124-779-00	ELECT CHIP	10µF	20%	16V
C7492	1-124-779-00	ELECT CHIP	10µF	20%	16V
C7494	1-162-965-11	CERAMIC CHIP	0.0015µF	10%	50V
C7495	1-162-965-11	CERAMIC CHIP	0.0015µF	10%	50V
C7496	1-162-965-11	CERAMIC CHIP	0.0015µF	10%	50V
C7497	1-162-965-11	CERAMIC CHIP	0.0015µF	10%	50V
C7498	1-164-156-11	CERAMIC CHIP	0.1µF		25V
C7499	1-164-156-11	CERAMIC CHIP	0.1µF		25V
C7501	1-126-395-11	ELECT CHIP	22µF	20%	16V
C7502	1-164-156-11	CERAMIC CHIP	0.1µF		25V
C7503	1-164-156-11	CERAMIC CHIP	0.1µF		25V
C7504	1-164-156-11	CERAMIC CHIP	0.1µF		25V
C7506	1-117-681-11	ELECT CHIP	100µF	20%	16V
C7509	1-117-681-11	ELECT CHIP	100µF	20%	16V
C7511	1-162-974-11	CERAMIC CHIP	0.01µF		50V
C7528	1-126-206-11	ELECT CHIP	100µF	20%	6.3V
C7532	1-117-681-11	ELECT CHIP	100µF	20%	16V
C7539	1-164-156-11	CERAMIC CHIP	0.1µF		25V
C7540	1-164-156-11	CERAMIC CHIP	0.1µF		25V
C7541	1-164-156-11	CERAMIC CHIP	0.1µF		25V
C7542	1-164-156-11	CERAMIC CHIP	0.1µF		25V

< CONNECTOR >

*CN7300	1-816-598-11	PIN, CONNECTOR 12P	
*CN7303	1-817-702-11	CONNECTOR, BOARD TO BOARD 4P	
*CN7305	1-817-717-11	CONNECTOR, BOARD TO BOARD 80P	
*CN7306	1-817-701-11	CONNECTOR, BOARD TO BOARD 24P	
*CN7308	1-817-718-11	CONNECTOR, BOARD TO BOARD 40P	
CN7309	1-815-468-11	PIN, CONNECTOR (PC BOARD)	
*CN7310	1-793-141-21	PIN, CONNECTOR (PC BOARD) 15P	
CN7311	1-785-842-11	CONNECTOR, USB (VERTICAL TYPE)	

< DIODE >

D7300	8-719-404-50	DIODE	MA111-TX
D7301	8-719-404-50	DIODE	MA111-TX
D7302	8-719-404-50	DIODE	MA111-TX
D7303	8-719-404-50	DIODE	MA111-TX
D7304	8-719-404-50	DIODE	MA111-TX
D7305	8-719-404-50	DIODE	MA111-TX
D7306	8-719-060-99	DIODE	SML-210MT-T86
D7308	8-719-988-61	DIODE	1SS355TE-17
D7309	8-719-048-40	DIODE	MBRS140T3
D7310	8-719-048-40	DIODE	MBRS140T3

< FERRITE BEAD >

FB7300	1-400-089-21	FERRITE	0µH
FB7301	1-400-089-21	FERRITE	0µH
FB7302	1-469-835-21	FERRITE	0µH
FB7303	1-500-241-22	FERRITE	0µH
FB7304	1-469-835-21	FERRITE	0µH
FB7305	1-469-835-21	FERRITE	0µH
FB7306	1-414-229-11	FERRITE	0µH
FB7307	1-414-229-11	FERRITE	0µH
FB7308	1-469-835-21	FERRITE	0µH
FB7309	1-414-229-11	FERRITE	0µH
FB7310	1-414-229-11	FERRITE	0µH
FB7311	1-414-229-11	FERRITE	0µH
FB7312	1-414-229-11	FERRITE	0µH
FB7313	1-400-180-21	INDUCTOR	0µH
FB7314	1-400-180-21	INDUCTOR	0µH
FB7315	1-469-835-21	FERRITE	0µH
FB7317	1-400-089-21	FERRITE	0µH
FB7318	1-400-089-21	FERRITE	0µH
FB7319	1-216-295-91	SHORT CHIP	0
FB7321	1-469-835-21	FERRITE	0µH
FB7322	1-469-835-21	FERRITE	0µH
FB7323	1-469-835-21	FERRITE	0µH

< INDUSTOR >

FL7300	1-781-667-22	INDUCTOR	0µH

< IC >

IC7300	6-704-629-01	IC	215H25AKA13G
IC7301	6-703-182-01	IC	IRU3037CS
IC7302	6-703-182-01	IC	IRU3037CS
IC7303	8-759-592-47	IC	TC7SZ08FU(TE85R)
IC7304	8-759-592-47	IC	TC7SZ08FU(TE85R)

REF. NO.	PART NO.	DESCRIPTION			REMARK
IC7305	6-701-116-01	IC TPS3823-33DBVR			
IC7306	8-729-044-83	TRANSISTOR IRF7313-TR			
IC7307	8-729-044-83	TRANSISTOR IRF7313-TR			
IC7308	8-759-538-95	IC TC74LVX08FT(EL)			
IC7309	6-704-622-01	IC PQ015Y3H3ZP			
IC7310	6-703-048-01	IC XC6209B182MR			
IC7311	6-703-048-01	IC XC6209B182MR			
IC7312	6-703-048-01	IC XC6209B182MR			
IC7313	6-703-048-01	IC XC6209B182MR			
IC7314	6-703-048-01	IC XC6209B182MR			
IC7315	8-759-698-08	IC SN74CBTLV1G125DCKR			
IC7316	8-759-694-36	IC SN74CBTLV3257PWR			
IC7317	8-759-058-54	IC TC7S00FU(TE85R)			
IC7318	6-704-621-01	IC TC58DVM72A1TG00			
IC7319	6-704-621-01	IC TC58DVM72A1TG00			
IC7320	6-703-866-01	IC M25P10-AVMN6T			
IC7322	6-704-849-01	IC MT46V8M16P-6T			
IC7323	6-704-849-01	IC MT46V8M16P-6T			
IC7324	6-704-849-01	IC MT46V8M16P-6T			
IC7325	6-704-849-01	IC MT46V8M16P-6T			
IC7326	6-702-688-01	IC M24C64-WMN6T(B)			
IC7327	6-704-819-01	IC CS4335-KSZR			
IC7330	8-759-672-72	IC LM3526MX-H			
IC7335	8-759-592-47	IC TC7SZ08FU(TE85R)			
IC7336	8-759-592-47	IC TC7SZ08FU(TE85R)			
IC7337	8-759-592-50	IC TC7SZ126FU(TE85R)			
		< COIL >			
L7300	1-469-349-11	INDUCTOR	1μH		
L7301	1-416-948-21	INDUCTOR	10μH		
L7302	1-419-491-21	INDUCTOR	10μH		
L7303	1-414-751-11	INDUCTOR	1μH		
L7304	1-410-989-11	INDUCTOR	0.47μH		
L7305	1-410-989-11	INDUCTOR	0.47μH		
L7306	1-410-989-11	INDUCTOR	0.47μH		
L7307	1-410-989-11	INDUCTOR	0.47μH		
L7308	1-410-989-11	INDUCTOR	0.47μH		
L7309	1-410-989-11	INDUCTOR	0.47μH		
L7312	1-414-751-11	INDUCTOR	1μH		
		< TRANSISTOR >			
Q7300	8-729-422-27	TRANSISTOR 2SD601A-Q			
Q7301	8-729-422-27	TRANSISTOR 2SD601A-Q			
Q7302	8-729-422-27	TRANSISTOR 2SD601A-Q			
Q7303	8-729-424-02	TRANSISTOR 2SB709A-QRS-TX			
Q7304	8-729-422-27	TRANSISTOR 2SD601A-Q			
Q7305	8-729-422-27	TRANSISTOR 2SD601A-Q			
		< RESISTOR >			
R7300	1-216-864-11	SHORT CHIP	0		
R7301	1-216-864-11	SHORT CHIP	0		
R7303	1-216-845-11	METAL CHIP	100K	5%	1/10W
R7304	1-216-809-11	METAL CHIP	100	5%	1/10W
R7305	1-216-809-11	METAL CHIP	100	5%	1/10W
R7306	1-216-864-11	SHORT CHIP	0		
R7307	1-216-864-11	SHORT CHIP	0		
R7308	1-218-692-11	METAL CHIP	1K	0.5%	1/10W

REF. NO.	PART NO.	DESCRIPTION			REMARK
R7309	1-218-692-11	METAL CHIP	1K	0.5%	1/10W
R7310	1-216-801-11	METAL CHIP	22	5%	1/10W
R7311	1-216-833-11	METAL CHIP	10K	5%	1/10W
R7312	1-218-704-11	METAL CHIP	3.3K	0.5%	1/10W
R7313	1-218-704-11	METAL CHIP	3.3K	0.5%	1/10W
R7314	1-218-692-11	METAL CHIP	1K	0.5%	1/10W
R7315	1-216-864-11	SHORT CHIP	0		
R7316	1-216-864-11	SHORT CHIP	0		
R7317	1-216-809-11	METAL CHIP	100	5%	1/10W
R7318	1-216-837-11	METAL CHIP	22K	5%	1/10W
R7319	1-216-838-11	METAL CHIP	27K	5%	1/10W
R7320	1-216-864-11	SHORT CHIP	0		
R7321	1-216-809-11	METAL CHIP	100	5%	1/10W
R7322	1-216-801-11	METAL CHIP	22	5%	1/10W
R7324	1-216-833-11	METAL CHIP	10K	5%	1/10W
R7326	1-216-809-11	METAL CHIP	100	5%	1/10W
R7328	1-216-833-11	METAL CHIP	10K	5%	1/10W
R7329	1-216-793-11	METAL CHIP	4.7	5%	1/10W
R7330	1-216-793-11	METAL CHIP	4.7	5%	1/10W
R7332	1-216-833-11	METAL CHIP	10K	5%	1/10W
R7333	1-216-864-11	SHORT CHIP	0		
R7335	1-216-801-11	METAL CHIP	22	5%	1/10W
R7336	1-216-821-11	METAL CHIP	1K	5%	1/10W
R7337	1-216-833-11	METAL CHIP	10K	5%	1/10W
R7338	1-216-833-11	METAL CHIP	10K	5%	1/10W
R7339	1-216-809-11	METAL CHIP	100	5%	1/10W
R7340	1-216-821-11	METAL CHIP	1K	5%	1/10W
R7342	1-216-801-11	METAL CHIP	22	5%	1/10W
R7343	1-216-801-11	METAL CHIP	22	5%	1/10W
R7345	1-216-864-11	SHORT CHIP	0		
R7346	1-216-864-11	SHORT CHIP	0		
R7347	1-216-864-11	SHORT CHIP	0		
R7348	1-216-864-11	SHORT CHIP	0		
R7349	1-216-864-11	SHORT CHIP	0		
R7350	1-216-864-11	SHORT CHIP	0		
R7351	1-216-864-11	SHORT CHIP	0		
R7352	1-216-864-11	SHORT CHIP	0		
R7353	1-216-864-11	SHORT CHIP	0		
R7354	1-216-864-11	SHORT CHIP	0		
R7355	1-216-801-11	METAL CHIP	22	5%	1/10W
R7356	1-216-857-11	METAL CHIP	1M	5%	1/10W
R7357	1-216-801-11	METAL CHIP	22	5%	1/10W
R7358	1-216-833-11	METAL CHIP	10K	5%	1/10W
R7359	1-216-864-11	SHORT CHIP	0		
R7360	1-216-864-11	SHORT CHIP	0		
R7361	1-216-833-11	METAL CHIP	10K	5%	1/10W
R7363	1-216-833-11	METAL CHIP	10K	5%	1/10W
R7364	1-216-833-11	METAL CHIP	10K	5%	1/10W
R7365	1-216-833-11	METAL CHIP	10K	5%	1/10W
R7366	1-216-833-11	METAL CHIP	10K	5%	1/10W
R7368	1-216-833-11	METAL CHIP	10K	5%	1/10W
R7370	1-216-833-11	METAL CHIP	10K	5%	1/10W
R7374	1-216-833-11	METAL CHIP	10K	5%	1/10W
R7375	1-216-833-11	METAL CHIP	10K	5%	1/10W
R7378	1-216-833-11	METAL CHIP	10K	5%	1/10W
R7379	1-216-833-11	METAL CHIP	10K	5%	1/10W
R7381	1-216-864-11	SHORT CHIP	0		
R7382	1-216-833-11	METAL CHIP	10K	5%	1/10W
R7384	1-216-833-11	METAL CHIP	10K	5%	1/10W
R7385	1-216-845-11	METAL CHIP	100K	5%	1/10W
R7386	1-216-833-11	METAL CHIP	10K	5%	1/10W
R7387	1-216-801-11	METAL CHIP	22	5%	1/10W

REF. NO.	PART NO.	DESCRIPTION			REMARK
R7388	1-216-833-11	METAL CHIP	10K	5%	1/10W
R7389	1-216-809-11	METAL CHIP	100	5%	1/10W
R7390	1-216-809-11	METAL CHIP	100	5%	1/10W
R7391	1-216-833-11	METAL CHIP	10K	5%	1/10W
R7392	1-216-833-11	METAL CHIP	10K	5%	1/10W
R7393	1-216-833-11	METAL CHIP	10K	5%	1/10W
R7400	1-216-829-11	METAL CHIP	4.7K	5%	1/10W
R7401	1-218-667-11	METAL CHIP	91	0.5%	1/10W
R7402	1-218-667-11	METAL CHIP	91	0.5%	1/10W
R7403	1-218-692-11	METAL CHIP	1K	0.5%	1/10W
R7404	1-218-692-11	METAL CHIP	1K	0.5%	1/10W
R7405	1-216-801-11	METAL CHIP	22	5%	1/10W
R7406	1-216-801-11	METAL CHIP	22	5%	1/10W
R7407	1-216-801-11	METAL CHIP	22	5%	1/10W
R7408	1-216-801-11	METAL CHIP	22	5%	1/10W
R7410	1-216-801-11	METAL CHIP	22	5%	1/10W
R7411	1-216-801-11	METAL CHIP	22	5%	1/10W
R7413	1-216-803-11	METAL CHIP	33	5%	1/10W
R7414	1-216-803-11	METAL CHIP	33	5%	1/10W
R7415	1-216-803-11	METAL CHIP	33	5%	1/10W
R7416	1-216-803-11	METAL CHIP	33	5%	1/10W
R7417	1-216-803-11	METAL CHIP	33	5%	1/10W
R7418	1-216-803-11	METAL CHIP	33	5%	1/10W
R7419	1-216-803-11	METAL CHIP	33	5%	1/10W
R7420	1-216-803-11	METAL CHIP	33	5%	1/10W
R7421	1-216-833-11	METAL CHIP	10K	5%	1/10W
R7422	1-216-825-11	METAL CHIP	2.2K	5%	1/10W
R7423	1-216-833-11	METAL CHIP	10K	5%	1/10W
R7424	1-216-825-11	METAL CHIP	2.2K	5%	1/10W
R7425	1-216-825-11	METAL CHIP	2.2K	5%	1/10W
R7426	1-216-833-11	METAL CHIP	10K	5%	1/10W
R7427	1-216-825-11	METAL CHIP	2.2K	5%	1/10W
R7428	1-216-825-11	METAL CHIP	2.2K	5%	1/10W
R7429	1-216-809-11	METAL CHIP	100	5%	1/10W
R7430	1-216-809-11	METAL CHIP	100	5%	1/10W
R7431	1-216-825-11	METAL CHIP	2.2K	5%	1/10W
R7432	1-216-864-11	SHORT CHIP	0		
R7433	1-216-864-11	SHORT CHIP	0		
R7434	1-216-825-11	METAL CHIP	2.2K	5%	1/10W
R7435	1-216-825-11	METAL CHIP	2.2K	5%	1/10W
R7436	1-216-825-11	METAL CHIP	2.2K	5%	1/10W
R7437	1-216-825-11	METAL CHIP	2.2K	5%	1/10W
R7438	1-216-825-11	METAL CHIP	2.2K	5%	1/10W
R7439	1-216-825-11	METAL CHIP	2.2K	5%	1/10W
R7440	1-216-825-11	METAL CHIP	2.2K	5%	1/10W
R7441	1-216-825-11	METAL CHIP	2.2K	5%	1/10W
R7442	1-216-825-11	METAL CHIP	2.2K	5%	1/10W
R7443	1-216-825-11	METAL CHIP	2.2K	5%	1/10W
R7444	1-216-825-11	METAL CHIP	2.2K	5%	1/10W
R7445	1-216-864-11	SHORT CHIP	0		
R7448	1-216-864-11	SHORT CHIP	0		
R7451	1-216-864-11	SHORT CHIP	0		
R7452	1-216-801-11	METAL CHIP	22	5%	1/10W
R7453	1-216-801-11	METAL CHIP	22	5%	1/10W
R7454	1-216-864-11	SHORT CHIP	0		
R7455	1-216-809-11	METAL CHIP	100	5%	1/10W
R7456	1-216-801-11	METAL CHIP	22	5%	1/10W
R7457	1-216-845-11	METAL CHIP	100K	5%	1/10W
R7458	1-216-845-11	METAL CHIP	100K	5%	1/10W
R7459	1-216-801-11	METAL CHIP	22	5%	1/10W
R7460	1-216-821-11	METAL CHIP	1K	5%	1/10W
R7461	1-216-845-11	METAL CHIP	100K	5%	1/10W
R7462	1-218-690-11	METAL CHIP	820	0.5%	1/10W
R7463	1-218-690-11	METAL CHIP	820	0.5%	1/10W
R7464	1-218-708-11	METAL CHIP	4.7K	0.5%	1/10W
R7465	1-218-708-11	METAL CHIP	4.7K	0.5%	1/10W
R7466	1-216-833-11	METAL CHIP	10K	5%	1/10W
R7468	1-216-833-11	METAL CHIP	10K	5%	1/10W
R7469	1-216-837-11	METAL CHIP	22K	5%	1/10W
R7470	1-216-833-11	METAL CHIP	10K	5%	1/10W
R7471	1-216-829-11	METAL CHIP	4.7K	5%	1/10W
R7472	1-216-833-11	METAL CHIP	10K	5%	1/10W
R7473	1-216-829-11	METAL CHIP	4.7K	5%	1/10W
R7474	1-218-665-11	METAL CHIP	75	0.5%	1/10W
R7475	1-216-833-11	METAL CHIP	10K	5%	1/10W
R7476	1-216-829-11	METAL CHIP	4.7K	5%	1/10W
R7477	1-218-665-11	METAL CHIP	75	0.5%	1/10W
R7478	1-218-665-11	METAL CHIP	75	0.5%	1/10W
R7479	1-218-665-11	METAL CHIP	75	0.5%	1/10W
R7480	1-218-665-11	METAL CHIP	75	0.5%	1/10W
R7481	1-218-665-11	METAL CHIP	75	0.5%	1/10W
R7482	1-218-665-11	METAL CHIP	75	0.5%	1/10W
R7483	1-216-833-11	METAL CHIP	10K	5%	1/10W
R7484	1-216-850-11	METAL CHIP	270K	5%	1/10W
R7485	1-216-850-11	METAL CHIP	270K	5%	1/10W
R7486	1-216-833-11	METAL CHIP	10K	5%	1/10W
R7487	1-216-833-11	METAL CHIP	10K	5%	1/10W
R7488	1-216-818-11	METAL CHIP	560	5%	1/10W
R7489	1-216-818-11	METAL CHIP	560	5%	1/10W
R7490	1-216-821-11	METAL CHIP	1K	5%	1/10W
R7491	1-216-821-11	METAL CHIP	1K	5%	1/10W
R7493	1-216-809-11	METAL CHIP	100	5%	1/10W
R7494	1-216-809-11	METAL CHIP	100	5%	1/10W
R7497	1-216-821-11	METAL CHIP	1K	5%	1/10W
R7498	1-216-821-11	METAL CHIP	1K	5%	1/10W
R7499	1-216-821-11	METAL CHIP	1K	5%	1/10W
R7500	1-216-821-11	METAL CHIP	1K	5%	1/10W
R7501	1-216-841-11	METAL CHIP	47K	5%	1/10W
R7502	1-216-833-11	METAL CHIP	10K	5%	1/10W
R7503	1-216-821-11	METAL CHIP	1K	5%	1/10W
R7504	1-216-864-11	SHORT CHIP	0		
R7505	1-216-833-11	METAL CHIP	10K	5%	1/10W
R7506	1-216-845-11	METAL CHIP	100K	5%	1/10W
R7507	1-216-845-11	METAL CHIP	100K	5%	1/10W
R7508	1-216-864-11	SHORT CHIP	0		
R7509	1-216-801-11	METAL CHIP	22	5%	1/10W
R7510	1-216-833-11	METAL CHIP	10K	5%	1/10W
R7512	1-216-864-11	SHORT CHIP	0		
R7513	1-216-864-11	SHORT CHIP	0		
R7514	1-216-864-11	SHORT CHIP	0		
R7515	1-216-864-11	SHORT CHIP	0		
R7516	1-216-864-11	SHORT CHIP	0		
R7517	1-216-835-11	METAL CHIP	15K	5%	1/10W
R7518	1-216-835-11	METAL CHIP	15K	5%	1/10W
R7519	1-216-835-11	METAL CHIP	15K	5%	1/10W
R7520	1-216-835-11	METAL CHIP	15K	5%	1/10W
R7543	1-216-833-11	METAL CHIP	10K	5%	1/10W
R7546	1-216-864-11	SHORT CHIP	0		
R7547	1-216-864-11	SHORT CHIP	0		
R7549	1-216-801-11	METAL CHIP	22	5%	1/10W
R7550	1-216-801-11	METAL CHIP	22	5%	1/10W
R7551	1-216-801-11	METAL CHIP	22	5%	1/10W
R7552	1-216-801-11	METAL CHIP	22	5%	1/10W
R7554	1-216-809-11	METAL CHIP	100	5%	1/10W
R7556	1-216-825-11	METAL CHIP	2.2K	5%	1/10W
R7557	1-216-833-11	METAL CHIP	10K	5%	1/10W
R7558	1-216-809-11	METAL CHIP	100	5%	1/10W

REF. NO.	PART NO.	DESCRIPTION			REMARK
R7559	1-216-833-11	METAL CHIP	10K	5%	1/10W
R7562	1-216-801-11	METAL CHIP	22	5%	1/10W
R7563	1-216-801-11	METAL CHIP	22	5%	1/10W
R7564	1-216-864-11	SHORT CHIP	0		
R7565	1-216-864-11	SHORT CHIP	0		
R7566	1-216-864-11	SHORT CHIP	0		
R7567	1-216-864-11	SHORT CHIP	0		
R7568	1-216-864-11	SHORT CHIP	0		
R7569	1-216-864-11	SHORT CHIP	0		
R7570	1-216-864-11	SHORT CHIP	0		
R7571	1-216-864-11	SHORT CHIP	0		
R7572	1-216-864-11	SHORT CHIP	0		
R7573	1-216-864-11	SHORT CHIP	0		

< NETWORK RESISTOR >

RB7300	1-234-370-21	RES, NETWORK 22X4 (1005)			
RB7301	1-234-370-21	RES, NETWORK 22X4 (1005)			
RB7302	1-234-370-21	RES, NETWORK 22X4 (1005)			
RB7303	1-234-370-21	RES, NETWORK 22X4 (1005)			
RB7304	1-234-370-21	RES, NETWORK 22X4 (1005)			
RB7305	1-234-370-21	RES, NETWORK 22X4 (1005)			
RB7306	1-234-370-21	RES, NETWORK 22X4 (1005)			
RB7307	1-234-370-21	RES, NETWORK 22X4 (1005)			
RB7308	1-236-908-11	RES, CHIP NETWORK 10K (3216)			
RB7315	1-236-908-11	RES, CHIP NETWORK 10K (3216)			
RB7316	1-236-908-11	RES, CHIP NETWORK 10K (3216)			
RB7317	1-234-370-21	RES, NETWORK 22X4 (1005)			
RB7318	1-234-370-21	RES, NETWORK 22X4 (1005)			
RB7319	1-234-370-21	RES, NETWORK 22X4 (1005)			
RB7320	1-234-370-21	RES, NETWORK 22X4 (1005)			
RB7321	1-234-370-21	RES, NETWORK 22X4 (1005)			
RB7322	1-234-370-21	RES, NETWORK 22X4 (1005)			
RB7323	1-234-370-21	RES, NETWORK 22X4 (1005)			
RB7324	1-234-370-21	RES, NETWORK 22X4 (1005)			
RB7325	1-234-370-21	RES, NETWORK 22X4 (1005)			
RB7326	1-234-370-21	RES, NETWORK 22X4 (1005)			
RB7327	1-234-370-21	RES, NETWORK 22X4 (1005)			
RB7328	1-234-370-21	RES, NETWORK 22X4 (1005)			
RB7329	1-242-963-21	RES, NETWORK 33X4 (1005)			
RB7330	1-242-963-21	RES, NETWORK 33X4 (1005)			
RB7331	1-242-963-21	RES, NETWORK 33X4 (1005)			
RB7332	1-242-963-21	RES, NETWORK 33X4 (1005)			
RB7333	1-242-963-21	RES, NETWORK 33X4 (1005)			
RB7334	1-242-963-21	RES, NETWORK 33X4 (1005)			
RB7335	1-242-963-21	RES, NETWORK 33X4 (1005)			
RB7336	1-242-963-21	RES, NETWORK 33X4 (1005)			
RB7337	1-242-963-21	RES, NETWORK 33X4 (1005)			
RB7338	1-242-963-21	RES, NETWORK 33X4 (1005)			
RB7339	1-242-963-21	RES, NETWORK 33X4 (1005)			
RB7340	1-242-963-21	RES, NETWORK 33X4 (1005)			
RB7341	1-242-963-21	RES, NETWORK 33X4 (1005)			
RB7342	1-242-963-21	RES, NETWORK 33X4 (1005)			
RB7343	1-242-963-21	RES, NETWORK 33X4 (1005)			
RB7344	1-242-963-21	RES, NETWORK 33X4 (1005)			
RB7345	1-234-370-21	RES, NETWORK 22X4 (1005)			
RB7346	1-234-370-21	RES, NETWORK 22X4 (1005)			
RB7347	1-234-370-21	RES, NETWORK 22X4 (1005)			
RB7348	1-234-370-21	RES, NETWORK 22X4 (1005)			
RB7349	1-234-370-21	RES, NETWORK 22X4 (1005)			
RB7350	1-234-370-21	RES, NETWORK 22X4 (1005)			
RB7351	1-234-370-21	RES, NETWORK 22X4 (1005)			
RB7352	1-234-370-21	RES, NETWORK 22X4 (1005)			
RB7353	1-234-370-21	RES, NETWORK 22X4 (1005)			
RB7354	1-234-370-21	RES, NETWORK 22X4 (1005)			
RB7355	1-234-370-21	RES, NETWORK 22X4 (1005)			
RB7356	1-234-370-21	RES, NETWORK 22X4 (1005)			
RB7357	1-234-370-21	RES, NETWORK 22X4 (1005)			
RB7360	1-234-370-21	RES, NETWORK 22X4 (1005)			
RB7361	1-234-370-21	RES, NETWORK 22X4 (1005)			
RB7362	1-234-370-21	RES, NETWORK 22X4 (1005)			
RB7363	1-234-370-21	RES, NETWORK 22X4 (1005)			
RB7364	1-234-370-21	RES, NETWORK 22X4 (1005)			
RB7365	1-234-370-21	RES, NETWORK 22X4 (1005)			
RB7366	1-234-370-21	RES, NETWORK 22X4 (1005)			
RB7367	1-234-370-21	RES, NETWORK 22X4 (1005)			
RB7368	1-234-370-21	RES, NETWORK 22X4 (1005)			
RB7369	1-234-370-21	RES, NETWORK 22X4 (1005)			

< VIBRATOR >

X7300	1-579-922-11	VIBRATOR, CRYSTAL (CHIP TYPE)			

****

Due to the complexity of this board, performing component level field repairs is not recommended. If it is determined that this board has malfunctioned, the Complete Q Box Assembly (P/N A-1606-037-B) must be replaced.
Data is provided for reference only.

* A-1302-541-A QT BOARD, COMPLETE
****

< CAPACITOR >

C7901	1-128-551-11	ELECT	22µF	20%	63V
C7902	1-162-995-11	CERAMIC CHIP	0.022µF		50V
C7903	1-162-995-11	CERAMIC CHIP	0.022µF		50V
C7904	1-126-963-11	ELECT	4.7µF	20%	50V
C7905	1-115-339-11	CERAMIC CHIP	0.1µF	10%	50V
C7906	1-126-964-11	ELECT	10µF	20%	50V
C7907	1-126-933-11	ELECT	100µF	20%	16V
C7908	1-126-933-11	ELECT	100µF	20%	16V
C7909	1-126-935-11	ELECT	470µF	20%	16V
C7910	1-126-964-11	ELECT	10µF	20%	50V
C7911	1-126-933-11	ELECT	100µF	20%	16V
C7912	1-164-156-11	CERAMIC CHIP	0.1µF		25V
C7913	1-164-156-11	CERAMIC CHIP	0.1µF		25V
C7914	1-164-156-11	CERAMIC CHIP	0.1µF		25V
C7915	1-115-339-11	CERAMIC CHIP	0.1µF	10%	50V
C7916	1-164-156-11	CERAMIC CHIP	0.1µF		25V
C7917	1-126-947-11	ELECT	47µF	20%	35V
C7918	1-164-156-11	CERAMIC CHIP	0.1µF		25V
C7923	1-164-156-11	CERAMIC CHIP	0.1µF		25V
C7924	1-164-156-11	CERAMIC CHIP	0.1µF		25V
C7925	1-164-156-11	CERAMIC CHIP	0.1µF		25V
C7926	1-104-665-11	ELECT	100µF	20%	25V
C7927	1-164-156-11	CERAMIC CHIP	0.1µF		25V
C7928	1-127-692-11	CERAMIC CHIP	10µF	10%	16V
C7929	1-128-551-11	ELECT	22µF	20%	63V
C7930	1-164-156-11	CERAMIC CHIP	0.1µF		25V
C7931	1-164-156-11	CERAMIC CHIP	0.1µF		25V
C7932	1-162-970-11	CERAMIC CHIP	0.01µF	10%	25V
C7933	1-164-156-11	CERAMIC CHIP	0.1µF		25V

REF. NO.	PART NO.	DESCRIPTION			REMARK
		< CONNECTOR >			
*CN7900	1-817-700-11	CONNECTOR, BOARD TO BOARD 24P			
CN7902	6-600-234-01	IC GP1FA313TZ0F			
		< DIODE >			
D7900	8-719-046-91	DIODE MA2S111			
D7901	8-719-066-99	DIODE SML-210VTT86			
D7902	8-719-060-99	DIODE SML-210MT-T86			
		< FERRITE BEAD >			
FB7900	1-414-135-11	FERRITE	0μH		
FB7901	1-414-135-11	FERRITE	0μH		
FB7903	1-469-835-21	FERRITE	0μH		
FB7904	1-414-135-11	FERRITE	0μH		
FB7905	1-216-864-11	SHORT CHIP	0		
		< IC >			
IC7900	8-749-925-00	IC TK11819MTL			
IC7903	8-759-832-05	IC BA18BC0FP-E2			
IC7904	8-759-475-12	IC TC74LCX08F(EL)			
		< COIL >			
L7901	1-414-755-11	INDUCTOR	22μH		
L7902	1-410-120-11	INDUCTOR	1.2mH		
L7903	1-408-615-31	INDUCTOR	100μH		
L7904	1-414-754-11	INDUCTOR	10μH		
L7905	1-414-754-11	INDUCTOR	10μH		
L7906	1-414-754-11	INDUCTOR	10μH		
L7907	1-414-754-11	INDUCTOR	10μH		
L7908	1-414-754-11	INDUCTOR	10μH		
		< TRANSISTOR >			
Q7900	8-729-012-57	TRANSISTOR 2SK1399-T1B			
Q7901	8-729-012-57	TRANSISTOR 2SK1399-T1B			
Q7902	8-729-037-52	TRANSISTOR 2SD2216J-QR(TX).SO			
Q7903	8-729-037-52	TRANSISTOR 2SD2216J-QR(TX).SO			
		< RESISTOR >			
R7900	1-216-821-11	METAL CHIP	1K	5%	1/10W
R7901	1-216-845-11	METAL CHIP	100K	5%	1/10W
R7902	1-216-821-11	METAL CHIP	1K	5%	1/10W
R7903	1-216-864-11	SHORT CHIP	0		
R7904	1-216-864-11	SHORT CHIP	0		
R7907	1-216-833-11	METAL CHIP	10K	5%	1/10W
R7908	1-216-833-11	METAL CHIP	10K	5%	1/10W
R7909	1-216-833-11	METAL CHIP	10K	5%	1/10W
R7910	1-216-833-11	METAL CHIP	10K	5%	1/10W
R7927	1-216-801-11	METAL CHIP	22	5%	1/10W
R7928	1-216-801-11	METAL CHIP	22	5%	1/10W
R7930	1-216-801-11	METAL CHIP	22	5%	1/10W
R7931	1-216-809-11	METAL CHIP	100	5%	1/10W
R7932	1-216-809-11	METAL CHIP	100	5%	1/10W
R7934	1-216-801-11	METAL CHIP	22	5%	1/10W
R7935	1-216-801-11	METAL CHIP	22	5%	1/10W
R7936	1-216-817-11	METAL CHIP	470	5%	1/10W
R7937	1-216-841-11	METAL CHIP	47K	5%	1/10W
R7938	1-216-817-11	METAL CHIP	470	5%	1/10W
R7939	1-216-829-11	METAL CHIP	4.7K	5%	1/10W
R7940	1-216-817-11	METAL CHIP	470	5%	1/10W
R7941	1-216-805-11	METAL CHIP	47	5%	1/10W
R7943	1-216-805-11	METAL CHIP	47	5%	1/10W
R7944	1-216-805-11	METAL CHIP	47	5%	1/10W
R7945	1-216-809-11	METAL CHIP	100	5%	1/10W
R7947	1-216-864-11	SHORT CHIP	0		
R7948	1-216-864-11	SHORT CHIP	0		
R7949	1-216-864-11	SHORT CHIP	0		
R7950	1-216-864-11	SHORT CHIP	0		
		< TUNER >			
TU7900	8-598-647-00	TUNER UNIT,DIGITAL BTD-UA402SC			

****

* A-1405-689-A T BOARD, COMPLETE
****

		< CONNECTOR >			
*CN8001	1-564-506-11	PLUG, CONNECTOR 3P			
		< SWITCH >			
S8001	1-570-245-11	SWITCH, MICRO (LAMP DOOR)			

****

* A-1302-270-A U BOARD, COMPLETE
****

		< CAPACITOR >			
C9401	1-162-974-11	CERAMIC CHIP	0.01μF		50V
C9402	1-164-346-11	CERAMIC CHIP	1μF		16V
C9403	1-164-346-11	CERAMIC CHIP	1μF		16V
C9404	1-107-714-11	ELECT	10μF	20%	50V
C9405	1-107-714-11	ELECT	10μF	20%	50V
C9407	1-126-933-11	ELECT	100μF	20%	16V
C9410	1-162-966-11	CERAMIC CHIP	0.0022μF	10%	50V
C9411	1-162-966-11	CERAMIC CHIP	0.0022μF	10%	50V
C9412	1-126-964-11	ELECT	10μF	20%	50V
C9413	1-125-837-91	CERAMIC CHIP	1μF	10%	6.3V
C9414	1-125-837-91	CERAMIC CHIP	1μF	10%	6.3V
C9415	1-162-966-11	CERAMIC CHIP	0.0022μF	10%	50V
C9416	1-126-964-11	ELECT	10μF	20%	50V
C9417	1-162-966-11	CERAMIC CHIP	0.0022μF	10%	50V
C9418	1-125-837-91	CERAMIC CHIP	1μF	10%	6.3V
C9419	1-162-966-11	CERAMIC CHIP	0.0022μF	10%	50V
C9420	1-162-966-11	CERAMIC CHIP	0.0022μF	10%	50V
C9421	1-162-966-11	CERAMIC CHIP	0.0022μF	10%	50V
C9422	1-162-966-11	CERAMIC CHIP	0.0022μF	10%	50V
C9424	1-162-966-11	CERAMIC CHIP	0.0022μF	10%	50V
C9425	1-162-966-11	CERAMIC CHIP	0.0022μF	10%	50V
C9426	1-126-933-11	ELECT	100μF	20%	16V
C9429	1-162-966-11	CERAMIC CHIP	0.0022μF	10%	50V
C9430	1-162-966-11	CERAMIC CHIP	0.0022μF	10%	50V
C9432	1-162-966-11	CERAMIC CHIP	0.0022μF	10%	50V
C9433	1-162-966-11	CERAMIC CHIP	0.0022μF	10%	50V
C9434	1-126-963-11	ELECT	4.7μF	20%	50V
C9435	1-126-964-11	ELECT	10μF	20%	50V
C9436	1-126-964-11	ELECT	10μF	20%	50V
C9437	1-126-964-11	ELECT	10μF	20%	50V
C9438	1-126-964-11	ELECT	10μF	20%	50V
C9440	1-126-959-11	ELECT	0.47μF	20%	50V

REF. NO.	PART NO.	DESCRIPTION			REMARK
C9441	1-126-963-11	ELECT	4.7µF	20%	50V
C9442	1-126-964-11	ELECT	10µF	20%	50V
C9443	1-126-959-11	ELECT	0.47µF	20%	50V
C9444	1-126-964-11	ELECT	10µF	20%	50V
C9445	1-126-963-11	ELECT	4.7µF	20%	50V
C9448	1-162-970-11	CERAMIC CHIP	0.01µF	10%	25V
C9449	1-126-964-11	ELECT	10µF	20%	50V
C9450	1-126-964-11	ELECT	10µF	20%	50V
C9451	1-126-963-11	ELECT	4.7µF	20%	50V
C9453	1-162-970-11	CERAMIC CHIP	0.01µF	10%	25V
C9454	1-126-963-11	ELECT	4.7µF	20%	50V
C9455	1-126-964-11	ELECT	10µF	20%	50V
C9456	1-126-964-11	ELECT	10µF	20%	50V
C9457	1-127-715-91	CERAMIC CHIP	0.22µF	10%	16V
C9458	1-126-963-11	ELECT	4.7µF	20%	50V
C9459	1-107-714-11	ELECT	10µF	20%	50V
C9460	1-107-714-11	ELECT	10µF	20%	50V
C9461	1-126-964-11	ELECT	10µF	20%	50V
C9462	1-126-933-11	ELECT	100µF	20%	16V
C9463	1-107-714-11	ELECT	10µF	20%	50V
C9464	1-107-714-11	ELECT	10µF	20%	50V
C9465	1-126-964-11	ELECT	10µF	20%	50V
C9466	1-107-826-11	CERAMIC CHIP	0.1µF	10%	16V
C9467	1-164-360-11	CERAMIC CHIP	0.1µF		16V
C9468	1-126-964-11	ELECT	10µF	20%	50V
C9469	1-126-933-11	ELECT	100µF	20%	16V
C9470	1-164-230-11	CERAMIC CHIP	220pF	5%	50V
C9471	1-164-230-11	CERAMIC CHIP	220pF	5%	50V
C9472	1-127-573-11	CERAMIC CHIP	1µF	10%	16V
C9473	1-127-573-11	CERAMIC CHIP	1µF	10%	16V
C9474	1-126-964-11	ELECT	10µF	20%	50V
C9475	1-126-964-11	ELECT	10µF	20%	50V
C9476	1-126-934-11	ELECT	220µF	20%	16V
C9482	1-126-964-11	ELECT	10µF	20%	50V
C9484	1-127-573-11	CERAMIC CHIP	1µF	10%	16V
C9485	1-126-964-11	ELECT	10µF	20%	50V
C9486	1-126-964-11	ELECT	10µF	20%	50V
C9487	1-127-573-11	CERAMIC CHIP	1µF	10%	16V
C9488	1-125-837-91	CERAMIC CHIP	1µF	10%	6.3V
C9489	1-125-837-91	CERAMIC CHIP	1µF	10%	6.3V
C9490	1-107-714-11	ELECT	10µF	20%	50V
C9491	1-107-714-11	ELECT	10µF	20%	50V
C9494	1-126-963-11	ELECT	4.7µF	20%	50V
C9495	1-162-970-11	CERAMIC CHIP	0.01µF	10%	25V
C9496	1-126-959-11	ELECT	0.47µF	20%	50V
C9499	1-107-714-11	ELECT	10µF	20%	50V
C9500	1-107-714-11	ELECT	10µF	20%	50V
C9518	1-125-837-91	CERAMIC CHIP	1µF	10%	6.3V
C9519	1-164-156-11	CERAMIC CHIP	0.1µF		25V
C9520	1-125-891-11	CERAMIC CHIP	0.47µF	10%	10V
C9521	1-125-891-11	CERAMIC CHIP	0.47µF	10%	10V
C9522	1-126-964-11	ELECT	10µF	20%	50V
C9523	1-126-964-11	ELECT	10µF	20%	50V
C9524	1-125-891-11	CERAMIC CHIP	0.47µF	10%	10V
C9525	1-125-891-11	CERAMIC CHIP	0.47µF	10%	10V
C9526	1-109-982-11	CERAMIC CHIP	1µF	10%	10V
C9527	1-126-935-11	ELECT	470µF	20%	16V
C9528	1-164-156-11	CERAMIC CHIP	0.1µF		25V
C9529	1-125-891-11	CERAMIC CHIP	0.47µF	10%	10V
C9530	1-125-891-11	CERAMIC CHIP	0.47µF	10%	10V
C9531	1-126-964-11	ELECT	10µF	20%	50V
C9532	1-125-891-11	CERAMIC CHIP	0.47µF	10%	10V
C9533	1-125-891-11	CERAMIC CHIP	0.47µF	10%	10V
C9534	1-125-891-11	CERAMIC CHIP	0.47µF	10%	10V
C9535	1-125-891-11	CERAMIC CHIP	0.47µF	10%	10V
C9536	1-126-964-11	ELECT	10µF	20%	50V
C9537	1-125-891-11	CERAMIC CHIP	0.47µF	10%	10V
C9538	1-125-891-11	CERAMIC CHIP	0.47µF	10%	10V
C9539	1-164-156-11	CERAMIC CHIP	0.1µF		25V
C9540	1-107-826-11	CERAMIC CHIP	0.1µF	10%	16V
C9541	1-162-970-11	CERAMIC CHIP	0.01µF	10%	25V
C9542	1-125-837-91	CERAMIC CHIP	1µF	10%	6.3V
C9544	1-107-826-11	CERAMIC CHIP	0.1µF	10%	16V
C9545	1-126-964-11	ELECT	10µF	20%	50V
C9546	1-126-964-11	ELECT	10µF	20%	50V
C9547	1-126-964-11	ELECT	10µF	20%	50V
C9548	1-126-964-11	ELECT	10µF	20%	50V
C9549	1-164-360-11	CERAMIC CHIP	0.1µF		16V
C9550	1-126-964-11	ELECT	10µF	20%	50V
C9551	1-126-964-11	ELECT	10µF	20%	50V
C9552	1-126-964-11	ELECT	10µF	20%	50V
C9553	1-125-891-11	CERAMIC CHIP	0.47µF	10%	10V
C9554	1-125-891-11	CERAMIC CHIP	0.47µF	10%	10V
C9555	1-125-891-11	CERAMIC CHIP	0.47µF	10%	10V
C9556	1-125-891-11	CERAMIC CHIP	0.47µF	10%	10V
C9557	1-107-714-11	ELECT	10µF	20%	50V
C9558	1-107-714-11	ELECT	10µF	20%	50V
C9561	1-126-933-11	ELECT	100µF	20%	16V
C9564	1-107-826-11	CERAMIC CHIP	0.1µF	10%	16V

< CONNECTOR >

CN9400	1-564-528-11	PLUG, CONNECTOR 13P
*CN9401	1-793-923-11	CONNECTOR, DIN (PLUG) 64P
*CN9402	1-564-524-11	PLUG, CONNECTOR 9P
*CN9404	1-564-519-11	PLUG, CONNECTOR 4P
*CN9405	1-564-521-11	PLUG, CONNECTOR 6P
*CN9406	1-564-520-11	PLUG, CONNECTOR 5P

< DIODE >

D9400	8-719-081-97	DIODE MMDL914T1
D9401	8-719-081-97	DIODE MMDL914T1
D9416	8-719-069-61	DIODE DTZ10B
D9425	8-719-069-61	DIODE DTZ10B
D9430	8-719-041-97	DIODE MA113-(TX)
D9431	8-719-081-97	DIODE MMDL914T1
D9432	8-719-041-97	DIODE MA113-(TX)
D9433	8-719-069-61	DIODE DTZ10B
D9434	8-719-050-37	DIODE M1MA152WA-T1
D9435	8-719-914-43	DIODE DAN202K
D9438	8-719-069-61	DIODE DTZ10B
D9440	8-719-069-61	DIODE DTZ10B
D9441	8-719-069-61	DIODE DTZ10B
D9445	8-719-069-61	DIODE DTZ10B
D9446	8-719-069-61	DIODE DTZ10B

< FERRITE BEAD >

FB9400	1-414-228-11	FERRITE	0µH

< FILTER >

FL9400	1-400-087-21	FILTER, EMI REMOVAL (SMD)

REF. NO.	PART NO.	DESCRIPTION	REMARK
		< IC >	
IC9400	8-752-080-04	IC CXA2069Q	
IC9401	8-752-080-04	IC CXA2069Q	
IC9402	8-752-108-36	IC CXA2171AQ-T6	
IC9403	8-759-278-58	IC NJM4558V-TE2	
IC9404	8-759-548-56	IC M52055FP	
IC9405	8-759-278-58	IC NJM4558V-TE2	
		< JACK >	
J9400	1-815-015-11	JACK BLOCK, PIN (HD/DVD IN 6)	
J9401	1-573-967-12	BLOCK, (S) TERMINAL (VIDEO IN 1/3)	
J9402	1-815-015-11	JACK BLOCK, PIN (HD/DVD IN 5)	
J9404	1-764-143-11	JACK (CONTROL S IN)	
J9408	1-793-725-11	JACK BLOCK, PIN 2P (AUDIO OUT (VAR/FIX))	
J9409	1-774-748-11	TERMINAL BLOCK, S (VIDEO IN 4)	
J9410	1-764-143-11	JACK (CONTROL S OUT)	
		< COIL >	
L9401	1-469-856-21	INDUCTOR 10μH	
L9402	1-469-856-21	INDUCTOR 10μH	
L9403	1-412-058-11	INDUCTOR 10μH	
L9404	1-469-856-21	INDUCTOR 10μH	
		< TRANSISTOR >	
Q9400	8-729-026-53	TRANSISTOR 2SA1576A-T106-QR	
Q9401	8-729-026-53	TRANSISTOR 2SA1576A-T106-QR	
Q9402	8-729-026-53	TRANSISTOR 2SA1576A-T106-QR	
Q9403	8-729-026-53	TRANSISTOR 2SA1576A-T106-QR	
Q9404	8-729-905-35	TRANSISTOR 2SC4081-R	
Q9405	8-729-905-35	TRANSISTOR 2SC4081-R	
Q9406	8-729-905-35	TRANSISTOR 2SC4081-R	
Q9407	8-729-905-35	TRANSISTOR 2SC4081-R	
Q9408	8-729-026-53	TRANSISTOR 2SA1576A-T106-QR	
Q9409	8-729-905-35	TRANSISTOR 2SC4081-R	
Q9410	8-729-905-35	TRANSISTOR 2SC4081-R	
Q9411	8-729-026-53	TRANSISTOR 2SA1576A-T106-QR	
Q9412	8-729-026-53	TRANSISTOR 2SA1576A-T106-QR	
Q9413	8-729-026-53	TRANSISTOR 2SA1576A-T106-QR	
Q9414	8-729-026-53	TRANSISTOR 2SA1576A-T106-QR	
Q9415	8-729-026-53	TRANSISTOR 2SA1576A-T106-QR	
Q9416	8-729-907-00	TRANSISTOR DTC114EUA	
Q9417	8-729-907-00	TRANSISTOR DTC114EUA	
Q9418	8-729-026-53	TRANSISTOR 2SA1576A-T106-QR	
Q9419	8-729-905-35	TRANSISTOR 2SC4081-R	
Q9420	8-729-907-00	TRANSISTOR DTC114EUA	
Q9421	8-729-026-53	TRANSISTOR 2SA1576A-T106-QR	
Q9422	8-729-905-35	TRANSISTOR 2SC4081-R	
Q9423	8-729-905-35	TRANSISTOR 2SC4081-R	
Q9424	8-729-026-53	TRANSISTOR 2SA1576A-T106-QR	
Q9425	8-729-026-53	TRANSISTOR 2SA1576A-T106-QR	
Q9426	8-729-905-35	TRANSISTOR 2SC4081-R	
Q9427	8-729-905-35	TRANSISTOR 2SC4081-R	
Q9428	8-729-905-35	TRANSISTOR 2SC4081-R	
		< RESISTOR >	
R9400	1-216-295-91	SHORT CHIP 0	
R9403	1-216-295-91	SHORT CHIP 0	

REF. NO.	PART NO.	DESCRIPTION			REMARK
R9404	1-216-809-11	METAL CHIP	100	5%	1/10W
R9405	1-216-809-11	METAL CHIP	100	5%	1/10W
R9406	1-216-821-11	METAL CHIP	1K	5%	1/10W
R9407	1-216-821-11	METAL CHIP	1K	5%	1/10W
R9408	1-216-805-11	METAL CHIP	47	5%	1/10W
R9409	1-216-805-11	METAL CHIP	47	5%	1/10W
R9410	1-218-692-11	METAL CHIP	1K	0.5%	1/10W
R9411	1-218-692-11	METAL CHIP	1K	0.5%	1/10W
R9412	1-216-825-11	METAL CHIP	2.2K	5%	1/10W
R9413	1-216-825-11	METAL CHIP	2.2K	5%	1/10W
R9414	1-218-695-11	METAL CHIP	1.3K	0.5%	1/10W
R9415	1-216-821-11	METAL CHIP	1K	5%	1/10W
R9416	1-218-695-11	METAL CHIP	1.3K	0.5%	1/10W
R9417	1-216-825-11	METAL CHIP	2.2K	5%	1/10W
R9418	1-216-809-11	METAL CHIP	100	5%	1/10W
R9419	1-216-821-11	METAL CHIP	1K	5%	1/10W
R9420	1-216-825-11	METAL CHIP	2.2K	5%	1/10W
R9421	1-216-825-11	METAL CHIP	2.2K	5%	1/10W
R9422	1-216-809-11	METAL CHIP	100	5%	1/10W
R9423	1-216-825-11	METAL CHIP	2.2K	5%	1/10W
R9424	1-216-809-11	METAL CHIP	100	5%	1/10W
R9425	1-216-809-11	METAL CHIP	100	5%	1/10W
R9426	1-216-825-11	METAL CHIP	2.2K	5%	1/10W
R9427	1-216-809-11	METAL CHIP	100	5%	1/10W
R9428	1-216-809-11	METAL CHIP	100	5%	1/10W
R9429	1-216-864-11	SHORT CHIP	0		
R9430	1-216-825-11	METAL CHIP	2.2K	5%	1/10W
R9431	1-216-825-11	METAL CHIP	2.2K	5%	1/10W
R9432	1-216-825-11	METAL CHIP	2.2K	5%	1/10W
R9433	1-216-809-11	METAL CHIP	100	5%	1/10W
R9434	1-216-864-11	SHORT CHIP	0		
R9435	1-216-809-11	METAL CHIP	100	5%	1/10W
R9436	1-216-821-11	METAL CHIP	1K	5%	1/10W
R9437	1-216-809-11	METAL CHIP	100	5%	1/10W
R9438	1-216-821-11	METAL CHIP	1K	5%	1/10W
R9439	1-216-809-11	METAL CHIP	100	5%	1/10W
R9440	1-216-821-11	METAL CHIP	1K	5%	1/10W
R9441	1-216-821-11	METAL CHIP	1K	5%	1/10W
R9442	1-216-809-11	METAL CHIP	100	5%	1/10W
R9443	1-216-825-11	METAL CHIP	2.2K	5%	1/10W
R9444	1-216-809-11	METAL CHIP	100	5%	1/10W
R9445	1-216-825-11	METAL CHIP	2.2K	5%	1/10W
R9446	1-216-801-11	METAL CHIP	22	5%	1/10W
R9447	1-216-809-11	METAL CHIP	100	5%	1/10W
R9448	1-216-801-11	METAL CHIP	22	5%	1/10W
R9449	1-216-825-11	METAL CHIP	2.2K	5%	1/10W
R9450	1-216-825-11	METAL CHIP	2.2K	5%	1/10W
R9451	1-216-821-11	METAL CHIP	1K	5%	1/10W
R9452	1-216-821-11	METAL CHIP	1K	5%	1/10W
R9453	1-216-809-11	METAL CHIP	100	5%	1/10W
R9454	1-216-825-11	METAL CHIP	2.2K	5%	1/10W
R9455	1-216-809-11	METAL CHIP	100	5%	1/10W
R9456	1-216-825-11	METAL CHIP	2.2K	5%	1/10W
R9457	1-216-809-11	METAL CHIP	100	5%	1/10W
R9458	1-216-821-11	METAL CHIP	1K	5%	1/10W
R9459	1-216-821-11	METAL CHIP	1K	5%	1/10W
R9462	1-218-676-11	METAL CHIP	220	0.5%	1/10W
R9463	1-218-676-11	METAL CHIP	220	0.5%	1/10W
R9464	1-218-676-11	METAL CHIP	220	0.5%	1/10W
R9465	1-218-676-11	METAL CHIP	220	0.5%	1/10W
R9466	1-218-676-11	METAL CHIP	220	0.5%	1/10W
R9467	1-216-849-11	METAL CHIP	220K	5%	1/10W
R9468	1-216-849-11	METAL CHIP	220K	5%	1/10W

REF. NO.	PART NO.	DESCRIPTION			REMARK
R9469	1-218-665-11	METAL CHIP	75	0.5%	1/10W
R9470	1-218-676-11	METAL CHIP	220	0.5%	1/10W
R9471	1-216-849-11	METAL CHIP	220K	5%	1/10W
R9472	1-216-849-11	METAL CHIP	220K	5%	1/10W
R9473	1-218-676-11	METAL CHIP	220	0.5%	1/10W
R9474	1-218-676-11	METAL CHIP	220	0.5%	1/10W
R9475	1-218-676-11	METAL CHIP	220	0.5%	1/10W
R9476	1-218-676-11	METAL CHIP	220	0.5%	1/10W
R9477	1-218-676-11	METAL CHIP	220	0.5%	1/10W
R9478	1-218-676-11	METAL CHIP	220	0.5%	1/10W
R9479	1-216-849-11	METAL CHIP	220K	5%	1/10W
R9480	1-216-849-11	METAL CHIP	220K	5%	1/10W
R9481	1-218-665-11	METAL CHIP	75	0.5%	1/10W
R9482	1-218-665-11	METAL CHIP	75	0.5%	1/10W
R9483	1-218-665-11	METAL CHIP	75	0.5%	1/10W
R9484	1-216-849-11	METAL CHIP	220K	5%	1/10W
R9485	1-216-849-11	METAL CHIP	220K	5%	1/10W
R9486	1-218-665-11	METAL CHIP	75	0.5%	1/10W
R9487	1-218-665-11	METAL CHIP	75	0.5%	1/10W
R9488	1-218-665-11	METAL CHIP	75	0.5%	1/10W
R9489	1-218-676-11	METAL CHIP	220	0.5%	1/10W
R9490	1-218-676-11	METAL CHIP	220	0.5%	1/10W
R9491	1-218-676-11	METAL CHIP	220	0.5%	1/10W
R9492	1-218-676-11	METAL CHIP	220	0.5%	1/10W
R9493	1-218-676-11	METAL CHIP	220	0.5%	1/10W
R9494	1-218-676-11	METAL CHIP	220	0.5%	1/10W
R9495	1-216-849-11	METAL CHIP	220K	5%	1/10W
R9496	1-216-849-11	METAL CHIP	220K	5%	1/10W
R9497	1-216-838-11	METAL CHIP	27K	5%	1/10W
R9498	1-216-864-11	SHORT CHIP	0		
R9499	1-216-864-11	SHORT CHIP	0		
R9500	1-216-836-11	METAL CHIP	18K	5%	1/10W
R9501	1-216-833-11	METAL CHIP	10K	5%	1/10W
R9502	1-216-841-11	METAL CHIP	47K	5%	1/10W
R9503	1-216-864-11	SHORT CHIP	0		
R9504	1-216-837-11	METAL CHIP	22K	5%	1/10W
R9505	1-216-825-11	METAL CHIP	2.2K	5%	1/10W
R9506	1-216-825-11	METAL CHIP	2.2K	5%	1/10W
R9507	1-216-857-11	METAL CHIP	1M	5%	1/10W
R9508	1-216-827-11	METAL CHIP	3.3K	5%	1/10W
R9509	1-218-867-11	METAL CHIP	6.8K	0.5%	1/10W
R9510	1-216-825-11	METAL CHIP	2.2K	5%	1/10W
R9511	1-216-821-11	METAL CHIP	1K	5%	1/10W
R9512	1-216-825-11	METAL CHIP	2.2K	5%	1/10W
R9513	1-216-837-11	METAL CHIP	22K	5%	1/10W
R9514	1-216-837-11	METAL CHIP	22K	5%	1/10W
R9515	1-216-809-11	METAL CHIP	100	5%	1/10W
R9516	1-216-809-11	METAL CHIP	100	5%	1/10W
R9517	1-216-827-11	METAL CHIP	3.3K	5%	1/10W
R9518	1-216-827-11	METAL CHIP	3.3K	5%	1/10W
R9519	1-216-809-11	METAL CHIP	100	5%	1/10W
R9520	1-216-295-91	SHORT CHIP	0		
R9521	1-216-809-11	METAL CHIP	100	5%	1/10W
R9522	1-216-825-11	METAL CHIP	2.2K	5%	1/10W
R9523	1-216-809-11	METAL CHIP	100	5%	1/10W
R9524	1-216-825-11	METAL CHIP	2.2K	5%	1/10W
R9525	1-216-801-11	METAL CHIP	22	5%	1/10W
R9526	1-216-853-11	METAL CHIP	470K	5%	1/10W
R9527	1-216-853-11	METAL CHIP	470K	5%	1/10W
R9528	1-216-801-11	METAL CHIP	22	5%	1/10W
R9529	1-216-821-11	METAL CHIP	1K	5%	1/10W
R9530	1-218-685-11	METAL CHIP	510	0.5%	1/10W
R9531	1-216-825-11	METAL CHIP	2.2K	5%	1/10W
R9532	1-216-825-11	METAL CHIP	2.2K	5%	1/10W
R9533	1-218-684-11	METAL CHIP	470	0.5%	1/10W
R9534	1-216-821-11	METAL CHIP	1K	5%	1/10W
R9535	1-218-685-11	METAL CHIP	510	0.5%	1/10W
R9536	1-218-684-11	METAL CHIP	470	0.5%	1/10W
R9537	1-216-809-11	METAL CHIP	100	5%	1/10W
R9538	1-218-684-11	METAL CHIP	470	0.5%	1/10W
R9539	1-216-809-11	METAL CHIP	100	5%	1/10W
R9540	1-218-684-11	METAL CHIP	470	0.5%	1/10W
R9541	1-216-809-11	METAL CHIP	100	5%	1/10W
R9542	1-216-864-11	SHORT CHIP	0		
R9543	1-216-809-11	METAL CHIP	100	5%	1/10W
R9544	1-216-864-11	SHORT CHIP	0		
R9545	1-216-825-11	METAL CHIP	2.2K	5%	1/10W
R9546	1-216-825-11	METAL CHIP	2.2K	5%	1/10W
R9547	1-216-821-11	METAL CHIP	1K	5%	1/10W
R9548	1-216-821-11	METAL CHIP	1K	5%	1/10W
R9549	1-216-833-11	METAL CHIP	10K	5%	1/10W
R9550	1-218-685-11	METAL CHIP	510	0.5%	1/10W
R9551	1-218-684-11	METAL CHIP	470	0.5%	1/10W
R9552	1-216-821-11	METAL CHIP	1K	5%	1/10W
R9553	1-216-821-11	METAL CHIP	1K	5%	1/10W
R9554	1-216-821-11	METAL CHIP	1K	5%	1/10W
R9555	1-218-685-11	METAL CHIP	510	0.5%	1/10W
R9556	1-216-833-11	METAL CHIP	10K	5%	1/10W
R9557	1-216-853-11	METAL CHIP	470K	5%	1/10W
R9558	1-216-821-11	METAL CHIP	1K	5%	1/10W
R9559	1-218-684-11	METAL CHIP	470	0.5%	1/10W
R9560	1-216-825-11	METAL CHIP	2.2K	5%	1/10W
R9561	1-216-825-11	METAL CHIP	2.2K	5%	1/10W
R9562	1-216-853-11	METAL CHIP	470K	5%	1/10W
R9563	1-216-864-11	SHORT CHIP	0		
R9564	1-216-864-11	SHORT CHIP	0		
R9565	1-216-864-11	SHORT CHIP	0		
R9566	1-216-864-11	SHORT CHIP	0		
R9567	1-216-864-11	SHORT CHIP	0		
R9568	1-216-864-11	SHORT CHIP	0		
R9569	1-218-665-11	METAL CHIP	75	0.5%	1/10W
R9570	1-218-665-11	METAL CHIP	75	0.5%	1/10W
R9571	1-216-809-11	METAL CHIP	100	5%	1/10W
R9572	1-216-809-11	METAL CHIP	100	5%	1/10W
R9573	1-216-809-11	METAL CHIP	100	5%	1/10W
R9574	1-216-809-11	METAL CHIP	100	5%	1/10W
R9575	1-216-809-11	METAL CHIP	100	5%	1/10W
R9576	1-216-864-11	SHORT CHIP	0		
R9577	1-216-864-11	SHORT CHIP	0		
R9578	1-216-864-11	SHORT CHIP	0		
R9579	1-216-864-11	SHORT CHIP	0		
R9580	1-216-864-11	SHORT CHIP	0		
R9581	1-216-864-11	SHORT CHIP	0		
R9582	1-216-864-11	SHORT CHIP	0		
R9583	1-216-864-11	SHORT CHIP	0		
R9584	1-216-864-11	SHORT CHIP	0		
R9585	1-216-864-11	SHORT CHIP	0		
R9587	1-216-864-11	SHORT CHIP	0		
R9588	1-216-864-11	SHORT CHIP	0		
R9589	1-216-864-11	SHORT CHIP	0		
R9590	1-216-864-11	SHORT CHIP	0		
R9591	1-216-864-11	SHORT CHIP	0		
R9592	1-216-864-11	SHORT CHIP	0		
R9593	1-216-864-11	SHORT CHIP	0		
R9594	1-216-864-11	SHORT CHIP	0		

REF. NO.	PART NO.	DESCRIPTION			REMARK
R9595	1-216-864-11	SHORT CHIP	0		
R9596	1-216-864-11	SHORT CHIP	0		
R9597	1-216-864-11	SHORT CHIP	0		
R9598	1-216-864-11	SHORT CHIP	0		
R9599	1-216-864-11	SHORT CHIP	0		
R9600	1-216-809-11	METAL CHIP	100	5%	1/10W
R9601	1-216-809-11	METAL CHIP	100	5%	1/10W
R9602	1-216-809-11	METAL CHIP	100	5%	1/10W
R9608	1-216-809-11	METAL CHIP	100	5%	1/10W
R9609	1-216-809-11	METAL CHIP	100	5%	1/10W
R9610	1-216-809-11	METAL CHIP	100	5%	1/10W
R9611	1-216-801-11	METAL CHIP	22	5%	1/10W
R9612	1-216-801-11	METAL CHIP	22	5%	1/10W
R9613	1-216-851-11	METAL CHIP	330K	5%	1/10W
R9616	1-216-809-11	METAL CHIP	100	5%	1/10W
R9617	1-216-809-11	METAL CHIP	100	5%	1/10W
R9618	1-216-809-11	METAL CHIP	100	5%	1/10W
R9619	1-218-285-11	METAL CHIP	75	5%	1/10W
R9620	1-218-285-11	METAL CHIP	75	5%	1/10W
R9621	1-216-809-11	METAL CHIP	100	5%	1/10W
R9622	1-216-809-11	METAL CHIP	100	5%	1/10W
R9623	1-216-809-11	METAL CHIP	100	5%	1/10W
R9624	1-218-285-11	METAL CHIP	75	5%	1/10W
R9625	1-218-285-11	METAL CHIP	75	5%	1/10W
R9626	1-216-821-11	METAL CHIP	1K	5%	1/10W
R9627	1-216-797-11	METAL CHIP	10	5%	1/10W
R9629	1-216-295-91	SHORT CHIP	0		
R9630	1-218-716-11	METAL CHIP	10K	0.5%	1/10W
R9631	1-216-833-11	METAL CHIP	10K	5%	1/10W
R9632	1-216-821-11	METAL CHIP	1K	5%	1/10W
R9633	1-216-821-11	METAL CHIP	1K	5%	1/10W
R9634	1-216-821-11	METAL CHIP	1K	5%	1/10W
R9635	1-216-041-00	RES-CHIP	470	5%	1/10W
R9637	1-218-668-11	METAL CHIP	100	0.5%	1/10W
R9638	1-216-806-11	METAL CHIP	56	5%	1/10W
R9639	1-218-668-11	METAL CHIP	100	0.5%	1/10W
R9640	1-216-053-00	RES-CHIP	1.5K	5%	1/10W
R9641	1-216-806-11	METAL CHIP	56	5%	1/10W
R9642	1-218-668-11	METAL CHIP	100	0.5%	1/10W
R9643	1-216-053-00	RES-CHIP	1.5K	5%	1/10W
R9644	1-216-806-11	METAL CHIP	56	5%	1/10W
R9645	1-216-864-11	SHORT CHIP	0		
R9649	1-216-864-11	SHORT CHIP	0		
R9650	1-218-658-11	METAL CHIP	39	0.5%	1/10W
R9651	1-218-658-11	METAL CHIP	39	0.5%	1/10W
R9652	1-216-829-11	METAL CHIP	4.7K	5%	1/10W
R9653	1-216-829-11	METAL CHIP	4.7K	5%	1/10W
R9654	1-218-665-11	METAL CHIP	75	0.5%	1/10W
R9655	1-218-665-11	METAL CHIP	75	0.5%	1/10W
R9656	1-218-665-11	METAL CHIP	75	0.5%	1/10W
R9657	1-218-285-11	METAL CHIP	75	5%	1/10W
R9658	1-218-285-11	METAL CHIP	75	5%	1/10W
R9659	1-218-285-11	METAL CHIP	75	5%	1/10W
R9660	1-218-285-11	METAL CHIP	75	5%	1/10W
R9661	1-218-867-11	METAL CHIP	6.8K	0.5%	1/10W
R9662	1-216-827-11	METAL CHIP	3.3K	5%	1/10W
R9663	1-218-271-11	METAL CHIP	2K	5%	1/10W
R9664	1-218-271-11	METAL CHIP	2K	5%	1/10W
R9665	1-216-828-11	METAL CHIP	3.9K	5%	1/10W
R9666	1-216-828-11	METAL CHIP	3.9K	5%	1/10W
R9667	1-216-825-11	METAL CHIP	2.2K	5%	1/10W
R9668	1-218-867-11	METAL CHIP	6.8K	0.5%	1/10W
R9669	1-216-827-11	METAL CHIP	3.3K	5%	1/10W
R9670	1-216-809-11	METAL CHIP	100	5%	1/10W
R9671	1-216-821-11	METAL CHIP	1K	5%	1/10W
R9672	1-216-864-11	SHORT CHIP	0		
R9673	1-216-864-11	SHORT CHIP	0		
R9674	1-216-864-11	SHORT CHIP	0		
R9675	1-216-864-11	SHORT CHIP	0		
R9677	1-216-864-11	SHORT CHIP	0		
R9678	1-216-864-11	SHORT CHIP	0		
R9680	1-216-825-11	METAL CHIP	2.2K	5%	1/10W
R9681	1-218-867-11	METAL CHIP	6.8K	0.5%	1/10W
R9682	1-218-867-11	METAL CHIP	6.8K	0.5%	1/10W
R9683	1-216-825-11	METAL CHIP	2.2K	5%	1/10W
R9684	1-216-825-11	METAL CHIP	2.2K	5%	1/10W

< VARISTOR >

VD9400	1-803-974-21	VARISTOR, CHIP	(1608)
VD9404	1-803-974-21	VARISTOR, CHIP	(1608)
VD9405	1-803-974-21	VARISTOR, CHIP	(1608)
VD9406	1-803-974-21	VARISTOR, CHIP	(1608)
VD9407	1-803-974-21	VARISTOR, CHIP	(1608)
VD9408	1-803-974-21	VARISTOR, CHIP	(1608)
VD9409	1-803-974-21	VARISTOR, CHIP	(1608)
VD9410	1-803-974-21	VARISTOR, CHIP	(1608)
VD9411	1-803-974-21	VARISTOR, CHIP	(1608)
VD9412	1-803-974-21	VARISTOR, CHIP	(1608)
VD9413	1-803-974-21	VARISTOR, CHIP	(1608)
VD9414	1-803-974-21	VARISTOR, CHIP	(1608)
VD9415	1-803-974-21	VARISTOR, CHIP	(1608)
VD9416	1-803-974-21	VARISTOR, CHIP	(1608)
VD9417	1-803-974-21	VARISTOR, CHIP	(1608)
VD9418	1-803-974-21	VARISTOR, CHIP	(1608)
VD9419	1-803-974-21	VARISTOR, CHIP	(1608)
VD9420	1-803-974-21	VARISTOR, CHIP	(1608)
VD9421	1-803-974-21	VARISTOR, CHIP	(1608)
VD9422	1-803-974-21	VARISTOR, CHIP	(1608)
VD9423	1-803-974-21	VARISTOR, CHIP	(1608)
VD9424	1-803-974-21	VARISTOR, CHIP	(1608)
VD9427	1-803-974-21	VARISTOR, CHIP	(1608)
VD9428	1-803-974-21	VARISTOR, CHIP	(1608)
VD9431	1-803-974-21	VARISTOR, CHIP	(1608)
VD9432	1-803-974-21	VARISTOR, CHIP	(1608)
VD9433	1-803-974-21	VARISTOR, CHIP	(1608)
VD9436	1-803-974-21	VARISTOR, CHIP	(1608)
VD9437	1-803-974-21	VARISTOR, CHIP	(1608)
VD9438	1-803-974-21	VARISTOR, CHIP	(1608)
VD9439	1-803-974-21	VARISTOR, CHIP	(1608)
VD9440	1-803-974-21	VARISTOR, CHIP	(1608)
VD9441	1-803-974-21	VARISTOR, CHIP	(1608)
VD9442	1-803-974-21	VARISTOR, CHIP	(1608)

< VIBRATOR >

X9400 1-795-214-21 VIBRATOR, CERAMIC (4MHz)

****

* A-1604-652-A UD BLOCK
****

< CAPACITOR >

C7001	1-126-395-11	ELECT CHIP	22μF	20%	16V

REF. NO.	PART NO.	DESCRIPTION			REMARK
C7002	1-162-917-11	CERAMIC CHIP	15pF	5%	50V
C7004	1-162-970-11	CERAMIC CHIP	0.01µF	10%	25V
C7005	1-162-970-11	CERAMIC CHIP	0.01µF	10%	25V
C7006	1-124-779-00	ELECT CHIP	10µF	20%	16V
C7007	1-162-917-11	CERAMIC CHIP	15pF	5%	50V
C7008	1-162-970-11	CERAMIC CHIP	0.01µF	10%	25V
C7010	1-162-970-11	CERAMIC CHIP	0.01µF	10%	25V
C7011	1-162-970-11	CERAMIC CHIP	0.01µF	10%	25V
C7012	1-124-779-00	ELECT CHIP	10µF	20%	16V
C7013	1-162-970-11	CERAMIC CHIP	0.01µF	10%	25V
C7014	1-162-970-11	CERAMIC CHIP	0.01µF	10%	25V
C7015	1-162-970-11	CERAMIC CHIP	0.01µF	10%	25V
C7016	1-162-970-11	CERAMIC CHIP	0.01µF	10%	25V
C7017	1-164-156-11	CERAMIC CHIP	0.1µF		25V
C7018	1-162-923-11	CERAMIC CHIP	47pF	5%	50V
C7019	1-162-923-11	CERAMIC CHIP	47pF	5%	50V
C7020	1-162-923-11	CERAMIC CHIP	47pF	5%	50V
C7021	1-124-779-00	ELECT CHIP	10µF	20%	16V
C7022	1-115-416-11	CERAMIC CHIP	0.001µF	5%	25V
C7023	1-162-927-11	CERAMIC CHIP	100pF	5%	50V
C7024	1-124-779-00	ELECT CHIP	10µF	20%	16V
C7025	1-164-156-11	CERAMIC CHIP	0.1µF		25V
C7026	1-124-779-00	ELECT CHIP	10µF	20%	16V
C7027	1-164-156-11	CERAMIC CHIP	0.1µF		25V
C7028	1-164-156-11	CERAMIC CHIP	0.1µF		25V
C7029	1-164-156-11	CERAMIC CHIP	0.1µF		25V
C7030	1-162-927-11	CERAMIC CHIP	100pF	5%	50V
C7031	1-162-927-11	CERAMIC CHIP	100pF	5%	50V
C7032	1-162-927-11	CERAMIC CHIP	100pF	5%	50V
C7033	1-124-779-00	ELECT CHIP	10µF	20%	16V
C7034	1-164-156-11	CERAMIC CHIP	0.1µF		25V
C7035	1-164-156-11	CERAMIC CHIP	0.1µF		25V
C7036	1-164-156-11	CERAMIC CHIP	0.1µF		25V
C7037	1-164-156-11	CERAMIC CHIP	0.1µF		25V
C7038	1-164-156-11	CERAMIC CHIP	0.1µF		25V
C7039	1-126-395-11	ELECT CHIP	22µF	20%	16V
C7040	1-162-921-11	CERAMIC CHIP	33pF	5%	50V
C7041	1-164-156-11	CERAMIC CHIP	0.1µF		25V
C7042	1-164-156-11	CERAMIC CHIP	0.1µF		25V
C7043	1-164-156-11	CERAMIC CHIP	0.1µF		25V
C7044	1-164-156-11	CERAMIC CHIP	0.1µF		25V
C7045	1-164-156-11	CERAMIC CHIP	0.1µF		25V
C7046	1-164-156-11	CERAMIC CHIP	0.1µF		25V
C7047	1-164-156-11	CERAMIC CHIP	0.1µF		25V
C7048	1-164-156-11	CERAMIC CHIP	0.1µF		25V
C7049	1-164-156-11	CERAMIC CHIP	0.1µF		25V
C7050	1-164-156-11	CERAMIC CHIP	0.1µF		25V
C7051	1-164-156-11	CERAMIC CHIP	0.1µF		25V
C7052	1-164-156-11	CERAMIC CHIP	0.1µF		25V
C7053	1-164-156-11	CERAMIC CHIP	0.1µF		25V
C7056	1-126-395-11	ELECT CHIP	22µF	20%	16V
C7057	1-162-921-11	CERAMIC CHIP	33pF	5%	50V
C7058	1-164-156-11	CERAMIC CHIP	0.1µF		25V
C7059	1-164-156-11	CERAMIC CHIP	0.1µF		25V
C7060	1-164-156-11	CERAMIC CHIP	0.1µF		25V
C7061	1-164-156-11	CERAMIC CHIP	0.1µF		25V
C7062	1-164-156-11	CERAMIC CHIP	0.1µF		25V
C7064	1-126-395-11	ELECT CHIP	22µF	20%	16V
C7065	1-162-970-11	CERAMIC CHIP	0.01µF	10%	25V
C7066	1-162-970-11	CERAMIC CHIP	0.01µF	10%	25V
C7067	1-162-970-11	CERAMIC CHIP	0.01µF	10%	25V
C7068	1-162-970-11	CERAMIC CHIP	0.01µF	10%	25V
C7069	1-162-970-11	CERAMIC CHIP	0.01µF	10%	25V
C7070	1-164-156-11	CERAMIC CHIP	0.1µF		25V

REF. NO.	PART NO.	DESCRIPTION			REMARK
C7071	1-164-156-11	CERAMIC CHIP	0.1µF		25V
C7078	1-164-156-11	CERAMIC CHIP	0.1µF		25V
C7079	1-164-156-11	CERAMIC CHIP	0.1µF		25V
C7080	1-164-156-11	CERAMIC CHIP	0.1µF		25V
		< CONNECTOR >			
*CN7001	1-816-228-31	CONNECTOR, DVI (DVI-HDTV IN 7 VIDEO)			
*CN7005	1-564-520-11	PLUG, CONNECTOR 5P			
*CN7006	1-564-524-11	PLUG, CONNECTOR 9P			
*CN7007	1-564-519-11	PLUG, CONNECTOR 4P			
		< DIODE >			
D7001	8-719-914-43	DIODE DAN202K			
D7002	8-719-069-55	DIODE UDZSTE-175.6B			
D7003	8-719-069-55	DIODE UDZSTE-175.6B			
D7004	8-719-069-55	DIODE UDZSTE-175.6B			
D7006	8-719-069-55	DIODE UDZSTE-175.6B			
		< FERRITE BEAD >			
FB7001	1-414-760-21	FERRITE	0µH		
FB7002	1-414-760-21	FERRITE	0µH		
FB7003	1-414-760-21	FERRITE	0µH		
FB7004	1-414-760-21	FERRITE	0µH		
		< FILTER >			
FL7001	1-400-087-21	FILTER, EMI REMOVAL (SMD)			
FL7002	1-234-560-21	FILTER, LOW PASS			
FL7003	1-234-559-21	FILTER, LOW PASS			
FL7004	1-234-559-21	FILTER, LOW PASS			
		< IC >			
IC7001	8-759-672-79	IC M24C02-WMN6T(A)			
IC7002	8-749-015-18	IC PQ07VZ012ZP			
IC7003	8-749-015-18	IC PQ07VZ012ZP			
IC7004	6-702-080-01	IC GM7030-H			
IC7005	6-802-346-01	IC ST72631K4M1/NNLTR			
IC7006	8-759-714-06	IC M24C16-WMN6T(A)			
IC7007	6-702-170-01	IC PACDN006S			
IC7008	6-702-170-01	IC PACDN006S			
IC7009	6-702-170-01	IC PACDN006S			
		< JACK >			
J7000	1-580-441-51	JACK, PIN 2P (DVI-HDTV IN 7 AUDIO)			
		< COIL >			
L7001	1-412-058-11	INDUCTOR	10µH		
L7002	1-412-058-11	INDUCTOR	10µH		
		< RESISTOR >			
R7003	1-216-821-11	METAL CHIP	1K	5%	1/10W
R7004	1-218-852-11	METAL CHIP	1.6K	0.5%	1/10W
R7007	1-216-821-11	METAL CHIP	1K	5%	1/10W
R7012	1-216-821-11	METAL CHIP	1K	5%	1/10W
R7013	1-216-821-11	METAL CHIP	1K	5%	1/10W
R7014	1-216-821-11	METAL CHIP	1K	5%	1/10W
R7015	1-216-833-11	METAL CHIP	10K	5%	1/10W

REF. NO.	PART NO.	DESCRIPTION			REMARK
R7016	1-216-833-11	METAL CHIP	10K	5%	1/10W
R7020	1-216-833-11	METAL CHIP	10K	5%	1/10W
R7021	1-216-833-11	METAL CHIP	10K	5%	1/10W
R7023	1-216-833-11	METAL CHIP	10K	5%	1/10W
R7024	1-216-833-11	METAL CHIP	10K	5%	1/10W
R7025	1-216-833-11	METAL CHIP	10K	5%	1/10W
R7026	1-216-833-11	METAL CHIP	10K	5%	1/10W
R7029	1-218-692-11	METAL CHIP	1K	0.5%	1/10W
R7030	1-216-864-11	SHORT CHIP	0		
R7032	1-218-676-11	METAL CHIP	220	0.5%	1/10W
R7034	1-218-676-11	METAL CHIP	220	0.5%	1/10W
R7036	1-218-704-11	METAL CHIP	3.3K	0.5%	1/10W
R7037	1-218-676-11	METAL CHIP	220	0.5%	1/10W
R7040	1-216-833-11	METAL CHIP	10K	5%	1/10W
R7041	1-216-833-11	METAL CHIP	10K	5%	1/10W
R7042	1-164-156-11	CERAMIC CHIP	0.1µF		25V
R7043	1-216-829-11	METAL CHIP	4.7K	5%	1/10W
R7044	1-216-829-11	METAL CHIP	4.7K	5%	1/10W
R7045	1-216-833-11	METAL CHIP	10K	5%	1/10W
R7047	1-216-833-11	METAL CHIP	10K	5%	1/10W
R7050	1-216-864-11	SHORT CHIP	0		
R7051	1-216-864-11	SHORT CHIP	0		
R7053	1-216-833-11	METAL CHIP	10K	5%	1/10W
R7054	1-216-833-11	METAL CHIP	10K	5%	1/10W
R7056	1-216-833-11	METAL CHIP	10K	5%	1/10W
R7057	1-216-864-11	SHORT CHIP	0		
R7058	1-216-833-11	METAL CHIP	10K	5%	1/10W
R7059	1-216-864-11	SHORT CHIP	0		
R7060	1-216-833-11	METAL CHIP	10K	5%	1/10W
R7062	1-216-864-11	SHORT CHIP	0		
R7063	1-216-809-11	METAL CHIP	100	5%	1/10W
R7064	1-216-809-11	METAL CHIP	100	5%	1/10W
R7065	1-216-833-11	METAL CHIP	10K	5%	1/10W
R7066	1-218-694-11	METAL CHIP	1.2K	0.5%	1/10W
R7067	1-216-833-11	METAL CHIP	10K	5%	1/10W
R7068	1-216-801-11	METAL CHIP	22	5%	1/10W
R7069	1-216-801-11	METAL CHIP	22	5%	1/10W
R7071	1-216-803-11	METAL CHIP	33	5%	1/10W
R7072	1-216-803-11	METAL CHIP	33	5%	1/10W
R7075	1-218-676-11	METAL CHIP	220	0.5%	1/10W
R7080	1-218-704-11	METAL CHIP	3.3K	0.5%	1/10W
R7087	1-218-680-11	METAL CHIP	330	0.5%	1/10W
R7096	1-216-833-11	METAL CHIP	10K	5%	1/10W
R7097	1-216-809-11	METAL CHIP	100	5%	1/10W
R7098	1-216-809-11	METAL CHIP	100	5%	1/10W
R7099	1-216-809-11	METAL CHIP	100	5%	1/10W
R7101	1-216-864-11	SHORT CHIP	0		
R7106	1-216-833-11	METAL CHIP	10K	5%	1/10W
R7108	1-216-805-11	METAL CHIP	47	5%	1/10W
R7109	1-216-805-11	METAL CHIP	47	5%	1/10W
R7111	1-216-864-11	SHORT CHIP	0		
R7112	1-216-864-11	SHORT CHIP	0		
R7113	1-216-864-11	SHORT CHIP	0		
R7114	1-218-700-11	METAL CHIP	2.2K	0.5%	1/10W
R7115	1-218-700-11	METAL CHIP	2.2K	0.5%	1/10W
R7116	1-218-700-11	METAL CHIP	2.2K	0.5%	1/10W
R7117	1-218-668-11	METAL CHIP	100	0.5%	1/10W
R7119	1-218-668-11	METAL CHIP	100	0.5%	1/10W
R7121	1-216-864-11	SHORT CHIP	0		
R7123	1-218-704-11	METAL CHIP	3.3K	0.5%	1/10W
R7124	1-218-680-11	METAL CHIP	330	0.5%	1/10W
R7125	1-218-700-11	METAL CHIP	2.2K	0.5%	1/10W
R7126	1-216-864-11	SHORT CHIP	0		

REF. NO.	PART NO.	DESCRIPTION	REMARK
		< VIBRATOR >	
X7001	1-795-568-21	VIBRATOR, CRYSTAL 14.31818MHz	
X7002	1-795-567-21	VIBRATOR, CRYSTAL 12MHz	
**********			
		MISCELLANEOUS **********	
	1-418-257-11	FAN UNIT, DC	
⚠	1-468-798-11	POWER SUPPLY BLOCK	
	1-469-241-11	CORE, FERRITE (RFC-8 BK)	
	1-478-337-11	REMOTE COMMANDER (RM-Y914)	
	1-500-824-11	FERRITE CORE	
	1-543-793-11	FILTER, CLAMP (FERRITE CORE)	
*	1-557-056-31	CABLE, P-P	
	1-786-183-13	SWITCH, ANTENNA	
	1-787-057-11	D.C. FAN	
*	1-787-081-11	FAN, DC	
⚠	1-791-192-13	CORD, NOISE FILTER WITH POWER	
	1-792-826-11	CORD, CONNECTION	
	1-825-619-11	LOUDSPEAKER (5cm)	
	1-825-620-11	LOUDSPEAKER (15cm)	
	1-825-621-11	LOUDSPEAKER (13X7cm)	
	1-825-622-11	LOUDSPEAKER (13X7cm)	
	1-828-023-11	CORD WITH CONNECTOR (I-LINK)	
	1-900-278-58	CONNECTOR ASSY 14P LVDS (BLK)	
	1-900-278-59	CONNECTOR ASSY 14P LVDS (RED)	
⚠*	A-1606-034-A	LAMP BLOCK (RP) ASSY	
⚠*	A-1606-039-A	OPTICAL UNIT BLOCK ASSY(70XBR950)	
⚠*	A-1606-041-A	OPTICAL UNIT BLOCK ASSY(60XBR950)	
**********			
		ACCESSORIES & PACKING MATERIALS **********	
*	4-095-780-01	BOARD, TOP (70XBR950)	
*	4-095-781-01	BOTTOM BOARD (70XBR950)	
*	4-095-782-01	TRAY (70XBR950)	
*	4-095-783-01	INDIVIDUAL CARTON (70XBR950)	
*	4-095-784-01	CUSHION (UPPER) (70XBR950)	
*	4-095-785-01	CUSHION (LOWER) (70XBR950)	
*	4-095-786-01	BAG, PROTECTION (70XBR950)	
*	4-095-787-01	SHEET, PROTECTION (70XBR950)	
*	4-096-304-01	INDIVIDUAL CARTON (60XBR950)	
*	4-096-305-01	TRAY (60XBR950)	
*	4-096-306-01	BOARD, TOP (60XBR950)	
*	4-096-307-01	BOARD, BOTTOM(60XBR950)	
*	4-096-308-01	CUSHION, UPPER (60XBR950)	
*	4-096-309-01	CUSHION, LOWER (60XBR950)	
	4-097-520-11	MANUAL, INSTRUCTION	
	4-097-520-21	MANUAL, INSTRUCTION	
	4-097-520-31	MANUAL, INSTRUCTION	
*	4-097-659-01	BAG, PROTECTION	
*	4-097-660-01	SHEET, PROTECTION	
**********			
		REMOTE COMMANDER **********	
	1-478-337-11	REMOTE COMMANDER (RM-Y914)	

Sony EMCS Corporation
Ichinomiya TEC

9-965-384-02

English
2005BR02-1
©2005.2

SONY

LCD Projection TV KDF-60XBR950/KDF-70XBR950

SONY®

4-097-520-**11** (2)

GRAND WEGA

LCD Projection TV
HD-Monitor
Operating Instructions

KDF-60XBR950
KDF-70XBR950

XBR

DRC-MF V1
Digital Reality Creation

MEMORY STICK™

© 2003 Sony Corporation

WARNING

To prevent fire or shock hazard, do not expose the LCD Projection TV to rain or moisture.

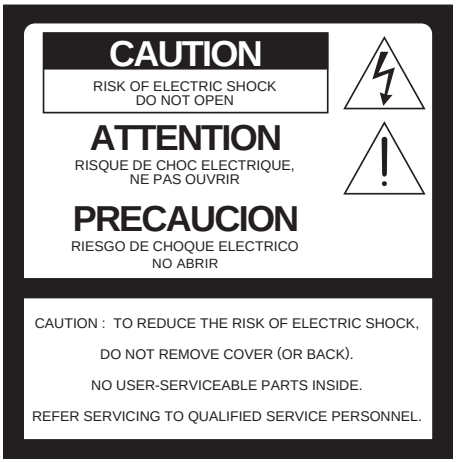

This symbol is intended to alert the user to the presence of uninsulated “dangerous voltage” within the product’s enclosure that may be of sufficient magnitude to constitute a risk of electric shock to persons.

This symbol is intended to alert the user to the presence of important operating and maintenance (servicing) instructions in the literature accompanying the appliance.

CAUTION

To prevent electric shock, do not use this polarized AC plug with an extension cord, receptacle or other outlet unless the blades can be fully inserted to prevent blade exposure.

Note on Caption Vision

This television receiver provides display of television closed captioning in accordance with §15.119 of the FCC rules.

Owner’s Record

The model and serial numbers are located at the rear of the LCD Projection TV, below the Sony logo, on the sticker, and also on the TV box (white label). Record these numbers in the spaces provided below. Refer to them whenever you call upon your Sony dealer regarding this product.

Model No._____

Serial No. _____

Note to CATV system installer

This reminder is provided to call the CATV system installer’s attention to Article 820-40 of the NEC that provides guidelines for proper grounding and, in particular, specifies that the cable ground shall be connected to the grounding system of the building, as close to the point of cable entry as practical.

Use of this television receiver for other than private viewing of programs broadcast on UHF, VHF, transmitted by cable companies or satellite for the use of the general public may require authorization from the broadcaster/cable company and/or program owner.

NOTIFICATION

This equipment has been tested and found to comply with the limits for a Class B digital device pursuant to Part 15 of the FCC Rules. These limits are designed to provide reasonable protection against harmful interference in a residential installation. This equipment generates, uses, and can radiate radio frequency energy and, if not installed and used in accordance with the instructions, may cause harmful interference with radio communications. However, there is no guarantee that interference will not occur in a particular installation. If this equipment does cause harmful interference to radio or television reception, which can be determined by turning the equipment off and on, the user is encouraged to try to correct the interference by one or more of the following measures:

- Reorient or relocate the receiving antennas.
- Increase the separation between the equipment and receiver.
- Connect the equipment into an outlet on a circuit different from that to which the receiver is connected.
- Consult the dealer or an experienced radio/TV technician for help.

You are cautioned that any changes or modifications not expressly approved in this manual could void your warranty and your authority to operate this equipment.

This document is for the remote control RM-Y914.

MODEL: KDF-60XBR950, KDF-70XBR950

Please keep this notice with the instruction manual.

Safety

- Operate the LCD Projection TV only on 120 V AC.
- The plug is designed, for safety purposes, to fit into the wall outlet only one way. If you are unable to insert the plug fully into the outlet, contact your dealer.
- If any liquid or solid object should fall inside the cabinet, unplug the LCD Projection TV immediately and have it checked by qualified service personnel before operating it further.
- If you will not be using the LCD Projection TV for several days, disconnect the power by pulling the plug itself. Never pull on the cord.

  For details concerning safety precautions, see “Important Safeguards” on page 4.

Installing

- To prevent internal heat buildup, do not block the ventilation openings.
- Do not install the LCD Projection TV in a hot or humid place, or in a place subject to excessive dust or mechanical vibration.
- Avoid operating the LCD Projection TV at temperature below 41°F (5°C).
- If the LCD Projection TV is transported directly from a cold to a warm location, or if the room temperature changes suddenly, the picture may be blurred or show poor color. In this case, please wait a few hours to let the moisture evaporate before turning on the LCD Projection TV.
- To obtain the best picture, do not expose the screen to direct illumination or direct sunlight. It is recommended to use spot lighting directed down from the ceiling or to cover the windows that face the screen with opaque drapery. It is desirable to install the LCD Projection TV in a room where the floor and walls are not of a reflective material.

As an ENERGY STAR® Partner, Sony Corporation has determined that this product meets the ENERGY STAR® guidelines for energy efficiency.

ENERGY STAR® is a U.S. registered mark.

TruSurround, SRS and the (●)® symbol are trademarks of SRS Labs, Inc.

TruSurround technology is incorporated under license from SRS Labs, Inc.

BBE and BBE Symbol are trademarks of BBE Sound, Inc. and are licensed by BBE Sound, Inc. under U.S. Patent No. 4,638,258 and 4,482,866.

ATTENTION

Pour prévenir les chocs électriques, ne pas utiliser cette fiche polarisée avec un prolongateur, une prise de courant ou une autre sortie de courant, sauf si les lames peuvent tre inserées à fond sans en laisser aucune partie à decouvert.

Important Safety Instructions

1) Read these instructions.
2) Keep these instructions.
3) Heed all warnings.
4) Follow all instructions.
5) Do not use this apparatus near water.
6) Clean only with dry cloth.
7) Do not block any ventilation openings. Install in accordance with the manufacturer's instructions.
8) Do not install near any heat sources such as radiators, heat registers, stoves, or other apparatus (including amplifiers) that produce heat.
9) Do not defeat the safety purpose of the polarized or grounding-type plug. A polarized plug has two blades with one wider than the other. A grounding type plug has two blades and a third grounding prong. The wide blade or the third prong are provided for your safety. If the provided plug does not fit into your outlet, consult an electrician for replacement of the obsolete outlet.
10) Protect the power cord from being walked on or pinched particularly at plugs, convenience receptacles, and the point where they exit from the apparatus.
11) Only use attachments/accessories specified by the manufacturer.
12) Use only with the cart, stand, tripod, bracket, or table specified by the manufacturer, or sold with the apparatus. When a cart is used, use caution when moving the cart/apparatus combination to avoid injury from tip-over.

13) Unplug this apparatus during lightning storms or when unused for long periods of time.
14) Refer all servicing to qualified service personnel. Servicing is required when the apparatus has been damaged in any way, such as power-supply cord or plug is damaged, liquid has been spilled or objects have fallen into the apparatus, the apparatus has been exposed to rain or moisture, does not operate normally, or has been dropped.
15) Apparatus shall not be exposed to dripping or splashing and no objects filled with liquids, such as vases, shall be placed on the apparatus.

Important Safeguards

For your protection, please read these instructions completely, and keep this manual for future reference.

Carefully observe and comply with all warnings, cautions and instructions placed on the set or described in the operating instructions or service manual.

WARNING

To guard against injury, the following basic safety precautions should be observed in the installation, use and servicing of the set.

Use

Power Sources

This set should be operated only from the type of power source indicated on the serial/model plate. If you are not sure of the type of electrical power supplied to your home, consult your dealer or local power company. For those sets designed to operate from battery power, refer to the operating instructions.

Grounding or Polarization

This set is equipped with a polarized AC power cord plug (a plug having one blade wider than the other), or with a three-wire grounding type plug (a plug having a third pin for grounding). Follow the instructions below:

For the set with a polarized AC power cord plug

This plug will fit into the power outlet only one way. This is a safety feature. If you are unable to insert the plug fully into the outlet, try reversing the plug. If the plug still fails to fit, contact your electrician to have a suitable outlet installed. Do not defeat the safety purpose of the polarized plug by forcing it in.

Alternate Warning for the set with a three-wire grounding type AC plug

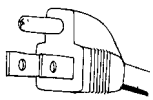

This plug will only fit into a grounding-type power outlet. This is a safety feature. If you are unable to insert the plug into the outlet, contact your electrician to have a suitable outlet installed. Do not defeat the safety purpose of the grounding plug.

Overloading

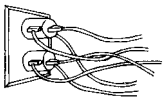

Do not overload wall outlets, extension cords or convenience receptacles beyond their capacity, since this can result in fire or electric shock.

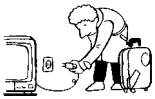

Always turn the set off when it is not being used. When the set is left unattended and unused for long periods of time, unplug it from the wall outlet as a precaution against the possibility of an internal malfunction that could create a fire hazard.

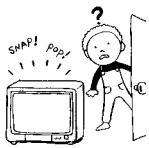

If a snapping or popping sound from a TV set is continuous or frequent while the TV is operating, unplug the TV and consult your dealer or service technician. It is normal for some TV sets to make occasional snapping or popping sounds, particularly when being turned on or off.

Object and Liquid Entry

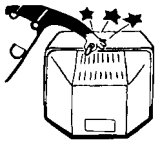

Never push objects of any kind into the set through the cabinet slots as they may touch dangerous voltage points or short out parts that could result in a fire or electric shock. Never spill liquid of any kind on the set.

Attachments

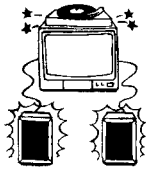

Do not use attachments not recommended by the manufacturer, as they may cause hazards.

Cleaning

Clean the cabinet of the LCD Projection TV with a dry soft cloth. To remove dust from the screen, wipe it gently with a soft cloth. Stubborn stains may be removed with a cloth slightly dampened with solution of mild soap and warm water. Never use strong solvents such as thinner or benzine for cleaning.

If the picture becomes dark after using the LCD Projection TV for a long period of time, it may be necessary to clean the inside of the LCD Projection TV. Consult qualified service personnel.

On contamination on the screen surface

The screen surface has a special coating to reduce a picture displayed by reflecting. If you clean the screen surface in the wrong way, the screen may be damaged. To clean the screen, do as follows:

- Clean the screen with a soft cloth, such as the supplied cleaning cloth or a glass cleaning cloth.
- To remove hard contamination, use the supplied cleaning cloth or a glass cleaning cloth moistened with a solution of mild detergent and water.
- Do not use any type of abrasive pad, alkaline cleaner, acid cleaner, scouring powder, chemical cloth, or solvent such as alcohol, benzene or thinner, as these may scratch the screen's coating.

Installation

Water and Moisture

Do not use power-line operated sets near water — for example, near a bathtub, washbowl, kitchen sink, or laundry tub, in a wet basement, or near a swimming pool, etc.

Accessories

Do not place the set on an unstable cart, stand, table or shelf. The set may fall, causing serious injury to a child or an adult and serious damage to the set. Use only a cart or stand recommended by the manufacturer for the specific model of LCD Projection TV. An appliance and cart combination should be moved with care. Quick stops, excessive force, and uneven surfaces may cause the appliance and cart combination to overturn.

Ventilation

The slots and openings in the cabinet and in the back or bottom are provided for necessary ventilation. To ensure reliable operation of the set, and to protect it from overheating, these slots and openings must never be blocked or covered.

- Never cover the slots and openings with a cloth or other materials.

- Never block the slots and openings by placing the set on a bed, sofa, rug or other similar surface.

- Never place the set in a confined space, such as a bookcase or built-in cabinet, unless proper ventilation is provided.

- Do not place the set near or over a radiator or heat register, or where it is exposed to direct sunlight.

Power-Cord Protection

Do not allow anything to rest on or roll over the power cord, and do not place the set where the power cord is subject to wear or abuse.

Antennas

Outdoor Antenna Grounding

If an outdoor antenna is installed, follow the precautions below. An outdoor antenna system should not be located in the vicinity of overhead power lines or other electric light or power circuits, or where it can come in contact with such power lines or circuits.

WHEN INSTALLING AN OUTDOOR ANTENNA SYSTEM, EXTREME CARE SHOULD BE TAKEN TO KEEP FROM CONTACTING SUCH POWER LINES OR CIRCUITS AS CONTACT WITH THEM IS ALMOST INVARIABLY FATAL.

Be sure the antenna system is grounded so as to provide some protection against voltage surges and built-up static charges.

Section 810 of the National Electrical Code (NEC) in USA and Section 54 of the Canadian Electrical Code in Canada provides information with respect to proper grounding of the mast and supporting structure, grounding of the lead-in wire to an antenna discharge unit, size of grounding conductors, location of antenna discharge unit, connection to grounding electrodes, and requirements for the grounding electrode.

Antenna Grounding According to the NEC

Refer to section 54-300 of Canadian Electrical Code for Antenna Grounding.

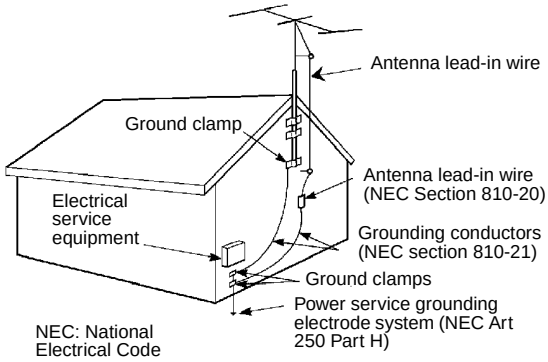

Lightning

For added protection for this television receiver during a lightning storm, or when it is left unattended and unused for long periods of time, unplug it from the wall outlet and disconnect the antenna. This will prevent damage to the receiver due to lightning and power-line surges.

Service

Damage Requiring Service

Unplug the set from the wall outlet and refer servicing to qualified service personnel under the following conditions:

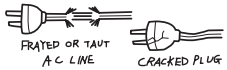

- When the power cord or plug is damaged or frayed.
- If liquid has been spilled into the set.

- If the set has been exposed to rain or water.
- If the set has been subject to excessive shock by being dropped, or the cabinet has been damaged.

- If the set does not operate normally when following the operating instructions. Adjust only those controls that are specified in the operating instructions. Improper adjustment of other controls may result in damage and will often require extensive work by a qualified technician to restore the set to normal operation.

- When the set exhibits a distinct change in performance, it indicates a need for service.

Servicing

Do not attempt to service the set by yourself since opening the cabinet may expose you to dangerous voltage or other hazards. Refer all servicing to qualified service personnel.

Replacement Parts

When replacement parts are required, be sure the service technician certifies in writing that he has used replacement parts specified by the manufacturer that have the same characteristics as the original parts.

Unauthorized substitutions may result in fire, electric shock or other hazards.

Safety Check

Upon completion of any service or repairs to the set, ask the service technician to perform routine safety checks (as specified by the manufacturer) to determine that the set is in safe operating condition, and to so certify. When the set reaches the end of its useful life, improper disposal could result in a picture tube implosion. Ask a qualified service technician to dispose of the set.

For Safety

Be careful when moving the LCD Projection TV

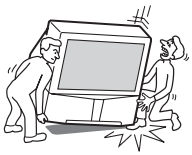

When you place the LCD Projection TV in position, be careful not to drop it on your foot or fingers.

Watch your footing while installing the LCD Projection TV.

Carry the LCD Projection TV in the specified manner

If you carry the LCD Projection TV in a manner other than the specified manner and without the specified number of persons, it may drop and a serious injury may be caused. Be sure to follow the instructions mentioned below.

- ❑ Carry the LCD Projection TV with the specified number of persons (see page 18).
- ❑ Do not carry the LCD Projection TV holding the speaker grill.
- ❑ Hold the LCD Projection TV tightly when carrying it.

About the LCD Projection TV

Although the LCD projection TV is made with high-precision technology, black dots may appear or bright points of light (red, blue, or green) may appear constantly on the LCD screen. This is a structural property of the LCD panel and is not a malfunction.

Installation

- ❑ If direct sunlight or other strong illumination shines on the screen, part of the screen may appear white due to reflections from behind the screen. This is a structural property of the LCD Projection TV.
  Do not expose the screen to direct illumination or direct sunlight.
- ❑ The picture quality may be affected by your viewing position. If you sit too close to the TV, you may suffer from eye fatigue.
  For the best picture quality, install your LCD projection TV according to the operating instructions.
  Sit at least 2.2 m (approx. 7 ft.) for KDF-60XBR950 or 2.6 m (approx. 8 ft.) for KDF-70XBR950 away from your LCD projection TV, and within 60° of the vertical viewing area, and 130° of the horizontal viewing area.
- ❑ When installing your LCD Projection TV against a wall, keep it at least 10 cm (4 inches) from the wall.
- ❑ Avoid installing the LCD projection TV near a heater, etc.

Projection lamp

- ❑ Your LCD projection TV uses a projection lamp as its light source. When the projection lamp wears out after using the LCD projection TV for a long period of time, the screen image becomes dark, or no image will appear on the display. If the lamp replacement indicator of the front panel blinks in red, replace the lamp with a new one (not supplied). In some cases, the bulb bursts inside the lamp unit noisily, but the lamp unit is securely designed so that the pieces of broken glass remain inside the lamp unit. (See “Replacing the Lamp” on page 13.)

Cooling fan

- ❑ This LCD projection TV uses a cooling fan to prevent the internal temperature from heating up. You might hear the noise from the cooling fan, depending on the place you install the LCD projection TV.

Contents

Introducing the Sony LCD Projection TV

Presenting the Sony LCD Projection TV.....9
Using This Manual.....10
Enjoying Your LCD Projection TV.....11
Replacing the Lamp.....13

Installing and Connecting the LCD Projection TV

Contents.....17
Inserting Batteries into the Remote Control.....17
Carrying Your LCD Projection TV.....18
To Prevent the LCD Projection TV from Falling Down.....19
When Installing Your LCD Projection TV Against a Wall.....19
Recommended Viewing Area.....20
LCD Projection TV Controls and Connectors.....21
Basic Connections: Connecting a Cable or Antenna.....25
Connecting a VCR and Cable.....32
Connecting a VCR and Cable Box.....33
Connecting Two VCRs for Tape Editing.....35
Connecting a Satellite Receiver.....36
Connecting a Satellite Receiver with a VCR.....37
Connecting an Audio Receiver.....39
Connecting a DVD Player with Component Video Connectors.....40
Connecting a DVD Player with A/V Connectors..41
Connecting a Camcorder.....42
Connecting a Device with an Optical IN Connector.....43
Using the CONTROL S Feature.....44
Setting Up the LCD Projection TV Automatically.....45

Using the Features

Using the Remote Control.....46
Programming the Remote Control.....48
Using Other Equipment with Your LCD Projection TV Remote Control.....50
Watching the TV.....52
Using Favorite Channels.....54
Using Twin View™.....55
Using the Freeze Function.....58
Using Wide Screen Mode.....59

Using the Digital Program Guide

Displaying the Digital Program Guide.....60

Using the Memory Stick Viewer

About Memory Stick.....64
Inserting and Removing a Memory Stick.....66
Using the Memory Stick Index.....69
Viewing Photos.....71
Playing Movies.....74
Memory Stick Index Menu Bar Options.....76
Notes on Using Memory Stick Media.....78

Using i.LINK

About i.LINK.....80
Selecting an i.LINK Device.....83
Using the i.LINK Control Panel.....84
i.LINK Setup.....86

Using the Menus

Overview.....87
Using the Video Menu.....88
Using the Audio Menu.....92
Using the Screen Menu.....94
Using the Channel Menu.....96
Using the Parent Menu.....98
Using the Setup Menu.....102

Other Information

Overview.....106
Glossary.....107
Contacting Sony.....108
Troubleshooting.....108
Flashing Indicators on the Front of the Monitor..114
Specifications.....115

Introducing the Sony LCD Projection TV

Presenting the Sony LCD Projection TV

Thank you for purchasing the Sony LCD Projection TV.
This manual is for models KDF-60XBR950 and KDF-70XBR950.

Features

Some of the features that you will enjoy with your new LCD projection TV include:

- **Integrated HDTV:** You can watch digital television programs and enjoy the improved audio/video quality offered by these programs.
- **DRC® (Digital Reality Creation) Multifunction V1:** Unlike conventional line doublers, the DRC feature converts frames reproduced every 1/60th of a second in real time, minimizing the blur or ghost of the motion images (for 480i signals only).
- **CineMotion™:** Using the reverse 3-2 pull down technology, the CineMotion feature allows you to obtain a smooth picture movement when playing back movies or other video sources on film.
- **Twin View™:** Using Multi-Image Driver (MID-X), Twin View allows you to watch two programs side by side with the ability to zoom in on one picture and listen to the program in the selected window. You can watch pictures from two different sources (1080i, 720p, 480p or 480i) simultaneously.
- **Memory Stick® Viewer:** Allows you to view on your LCD Projection TV screen digital photos (JPEG) and movies (MPEG1) that are stored on Memory Stick media.
- **Parental Control:** V-Chip technology allows parents to block unsuitable programming for younger viewers.
- **Digital Visual Interface (DVI-HDTV):** Can accommodate a copy-protected digital connection (HDCP*) to other devices (such as digital set-top boxes) that have compatible interfaces. The DVI-HDTV input terminal is compliant with the EIA-861 standard and is not intended for use with personal computers.

* High-bandwidth Digital Content Protection

(Continued)

- **i.LINK:** Provides a secure digital interface to other digital home entertainment devices. i.LINK allows for the secure transfer of copyright-protected high-definition content between these devices and your LCD projection TV. The i.LINK is not compatible with personal computers.
- **Component Video Inputs:** Offers the best video quality for DVD (480p, 480i) and Digital Set-top box (1080i, 720p, 480p, 480i) connections.
- **S-VIDEO Inputs:** Provides a high-quality image for connected equipment.
- **Favorite Channel Preview:** Preview up to sixteen favorite channels without leaving the current channel.
- **Wide Screen Mode:** Allows you to watch 4:3 normal broadcasts in wide screen mode (16:9 aspect ratio).
- **Auto Wide:** Allows you to select the wide screen mode automatically.

Using This Manual

We recommend that you carefully review the contents of the following three sections in the order shown to ensure that you fully understand the operation of your new LCD projection TV.

1. Installing and Connecting the LCD Projection TV
   This section guides you through your initial setup. It shows you how to install your LCD projection TV, to connect your new components and to connect the antenna and cable.
2. Using the Features
   This section shows you how to begin using your new LCD projection TV. It also shows you how to use your remote control functions.
3. Using the menus
   This section teaches you how to access on-screen menus and adjust your LCD projection TV settings.

Instructions in this manual are written for the remote control. Similar controls are also found on the LCD projection TV console.

Enjoying Your LCD Projection TV

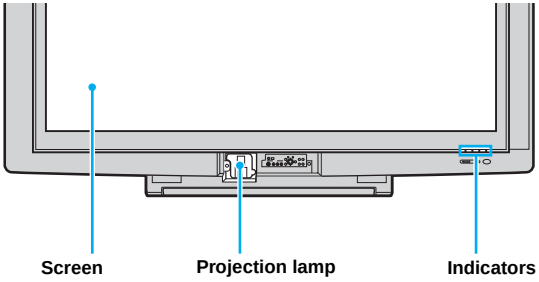

Indicators

The indicators show the current status of your LCD projection TV.

Screen

To minimize screen reflection, its surface has a special coating. Read the instructions “Use of the Cleaning Cloth” on page 12 carefully before cleaning.

Inappropriate cleaning methods could damage the finishing.

Projection lamp

Your LCD projection TV uses a projection lamp as its light source. Note the following:

- After turning on your LCD projection TV, it may take a while before the picture appears (1 minute or less).
- When the projection lamp wears out, the screen image becomes dark. Replace the lamp with a new Sony XL-2100U replacement lamp (not supplied).

✍ Be sure to attach the lamp cover securely; otherwise, your LCD projection TV will not turn on. For details on lamp replacement, see “Replacing the Lamp” on page 13.

✍ The light emitted from the lamp is quite bright when your LCD projection TV is in use. To avoid eye discomfort or injury, do not look into the housing when the power is on.

Notes on the LCD Projection TV

To enjoy clear pictures

- Be sure not to allow sunlight or light from a lamp to shine directly onto the screen.
- The screen surface is easily scratched. Do not rub, touch, or tap it with a sharp or abrasive object (see “Use of the Cleaning Cloth” below).

On moisture condensation

- If your LCD projection TV is transported directly from a cold to a warm location, is placed in a humid room, or if the room temperature changes suddenly, the picture may be blurred or show poor color. This is because moisture has condensed on the lenses inside. If this happens, leave the power on and let the moisture evaporate before using your LCD projection TV.

When the LCD projection TV will not be used for a long period of time

- Turn off the main power on the front of your LCD projection TV before going to sleep or going out. Disconnect the AC plug if idle for more than 7 days.

When turning off the power

- Be sure to turn off the power switch on the main unit or on the remote control. After turning off the power, the fan will continue to blow for about two minutes. Be sure to wait for several minutes after turning the power off when unplugging from the outlet or switching the breaker off.

When carrying the LCD Projection TV

- Before carrying, unplug the power cord and disconnect all cables.
  Do not carry the LCD projection TV by placing hands under the front screen.

Use of the Cleaning Cloth

To remove dust from the front of the screen, wipe with the supplied Cleaning Cloth.

✍ Do not use any type of abrasive pad, alkaline cleaner, scouring powder, window cleaners or solvent such as alcohol or benzene. Otherwise, this type of contact may result in a damaged screen.

✍ To clean the screen, please use the supplied Cleaning Cloth lightly moistened with water diluted mild detergent solution. Do not apply heavy press when cleaning.

✍ The supplied Cleaning Cloth is washable with warm water and a mild detergent solution, and can be used repeatedly.

Replacing the Lamp

The projection lamp has a limited life which illuminates the picture.

If the screen becomes dark, the color looks unusual, or the LAMP indicator on the front of the LCD projection TV flashes, it is time to replace the lamp with a new one (not supplied).

> ⚠ **WARNING**
> Electric appliances can cause fire or high temperature, resulting in injury or death. Be sure to follow the instructions below.

- Use a Sony XL-2100U replacement lamp (not supplied) for replacement. Failure to do so may damage the LCD projection TV.
- Do not remove the lamp for any purpose other than replacement. Failure to do so may cause fire or a skin burn.
- Before replacing the lamp, turn the power off on the main unit, then several minutes later, unplug the power cord. (The cooling fan will continue to blow for about two minutes after turning the power off.)
- Before replacing the lamp, let it cool down completely, as the surface of the lamp remains extremely hot for at least 30 minutes after the power has been turned off.
- Do not leave the removed lamp near flammable materials or within the reach of children.
- Do not pour water onto the removed lamp, or put any object inside the lamp. Doing so may cause the lamp to burst.
- Do not put flammable materials and metal objects inside the lamp receptacle of the LCD projection TV after removing the lamp. Doing so may cause fire or electrical shock. Also, be sure not to touch the receptacle, because it may cause a skin burn.
- Mount the new lamp securely, otherwise the screen may become dark, or it may cause a fire.
- Do not touch the glass with your fingers on the new lamp.

The used lamp

Used lamp contains Mercury, Dispose According to Local, State or Federal Laws.

> ✍ Do not touch the front glass of a new lamp or the glass of the lamp receptacle. This may reduce picture quality or lamp life.

(Continued)

1 Turn off the power switch on the LCD projection TV and after several minutes, unplug the power cord.
(The cooling fan will continue to blow for about two minutes after turning the power off.)

✍ Do not touch the front glass of a new lamp or the glass of the lamp receptacle. This may reduce picture quality or lamp life.

2 Unplug the power cord after turning off the main power. Wait at least 30 minutes to allow the lamp to cool down before replacing it.
Take the new lamp out of the box.

3 Remove the control panel cover.

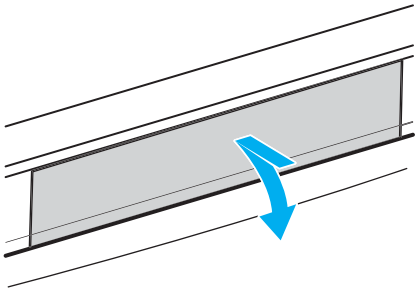

Push and release the center in the upper of the control panel cover to open it.

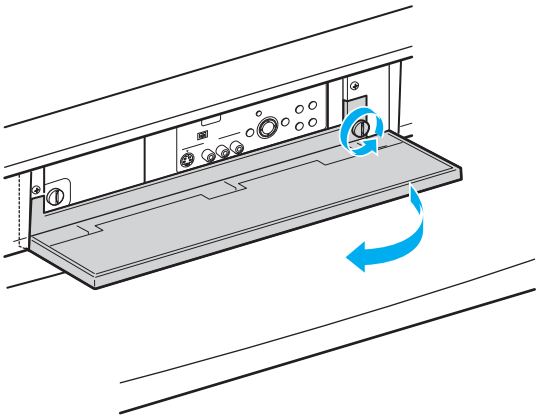

Loosen the screw in the right underneath with a coin or similar object and remove the control panel cover.

4 Loosen the screw with a coin or similar object to remove the lamp cover.

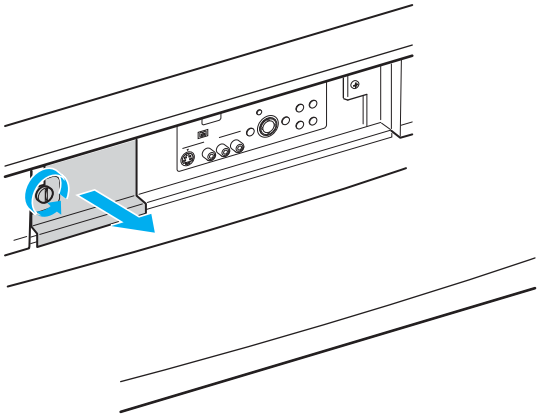

5 Loosen the two screws that secure the lamp, then pull out the lamp.
The lamp is very hot immediately after use. Never touch the front glass of the lamp or the surrounding parts.

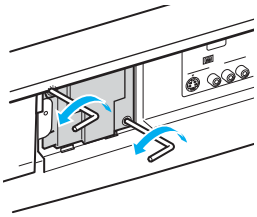

Loosen the two screws as shown in the illustration using the hex key supplied with the lamp.

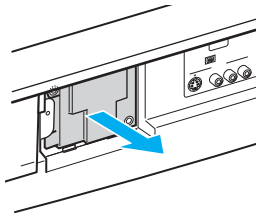

Hold the handle and pull straight out.

✍ After it has cooled, place the removed lamp into the empty box of the replacement lamp. Never put the removed lamp into a plastic bag.

6 Mount the new lamp.
Be sure to attach the new lamp securely.

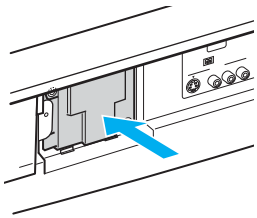

Mount the new lamp securely into the lamp receptacle.

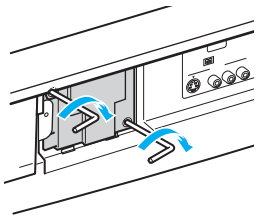

Tighten the two screws securely as shown in the illustration using the hex key supplied with the lamp.

(Continued)

7 Mount the lamp cover and tighten the screw.
Make sure that the lamp cover is mounted securely, otherwise the power will not turn on.

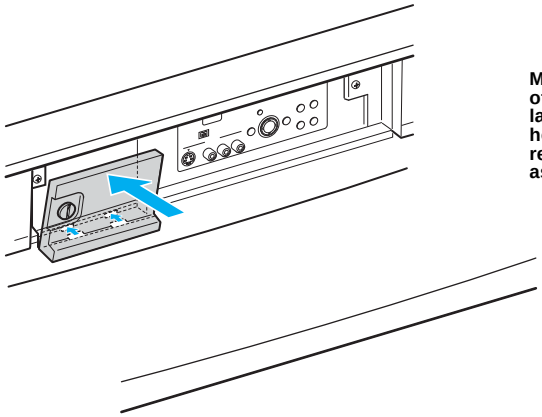

Match the projections of the underneath of the lamp cover with the holes of the unit, and replace the lamp cover as it was.

✍ If the lamp cover is not mounted securely, the self-diagnostic function works and the POWER/STANDBY indicator flashes for three times.

8 Mount the front panel in the order of ① to ③, as shown in the illustration.

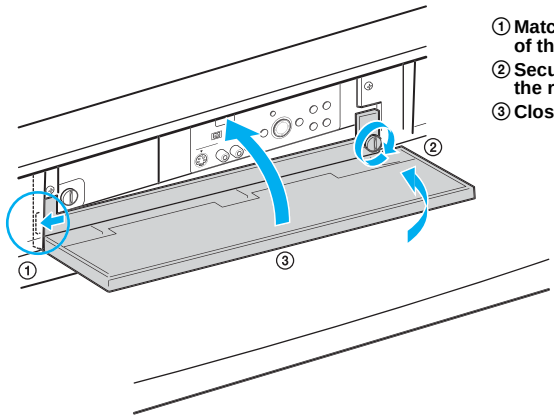

① Match the projection of the left side.
② Secure the screw of the right side.
③ Close the front panel.

✍ Consult your Sony dealer for a Sony XL-2100U replacement lamp.

✍ Take great care when replacing the lamp or plugging in/unplugging the connecting cords. If you handle them roughly, the LCD projection TV may fall or be moved, and the TV stand or floor surfaces may be scratched.

Installing and Connecting the LCD Projection TV

Contents

The box contains your new LCD projection TV, a remote control and two AA (R6) batteries. No peripheral cables are included. If you intend to add additional equipment to your LCD projection TV, please check the hookup instructions for your desired setup before you begin. You may need to purchase cables and/or splitters to complete the hookup properly.

Inserting Batteries into the Remote Control

Insert two size AA (R6) batteries (supplied) by matching the + and – on the batteries to the diagram inside the battery compartment.

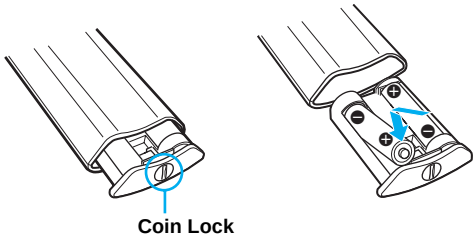

- Remove the batteries to avoid damage from possible battery leakage whenever you anticipate that the remote control will not be used for an extended period.
- Handle the remote control with care. Avoid dropping it, getting it wet, or placing it in direct sunlight, near a heater, or where the humidity is high.
- Your remote control can be programmed to operate most video equipment. (See “Programming the Remote Control” on page 48.)

Carrying Your LCD Projection TV

Carrying the LCD projection TV requires at least four people. Do not grasp the pedestal or the front panel of the LCD projection TV, otherwise these parts might break off.

When moving the LCD projection TV, support the screen bottom with one hand while grasping the top part with the other hand, as shown in the illustration below.

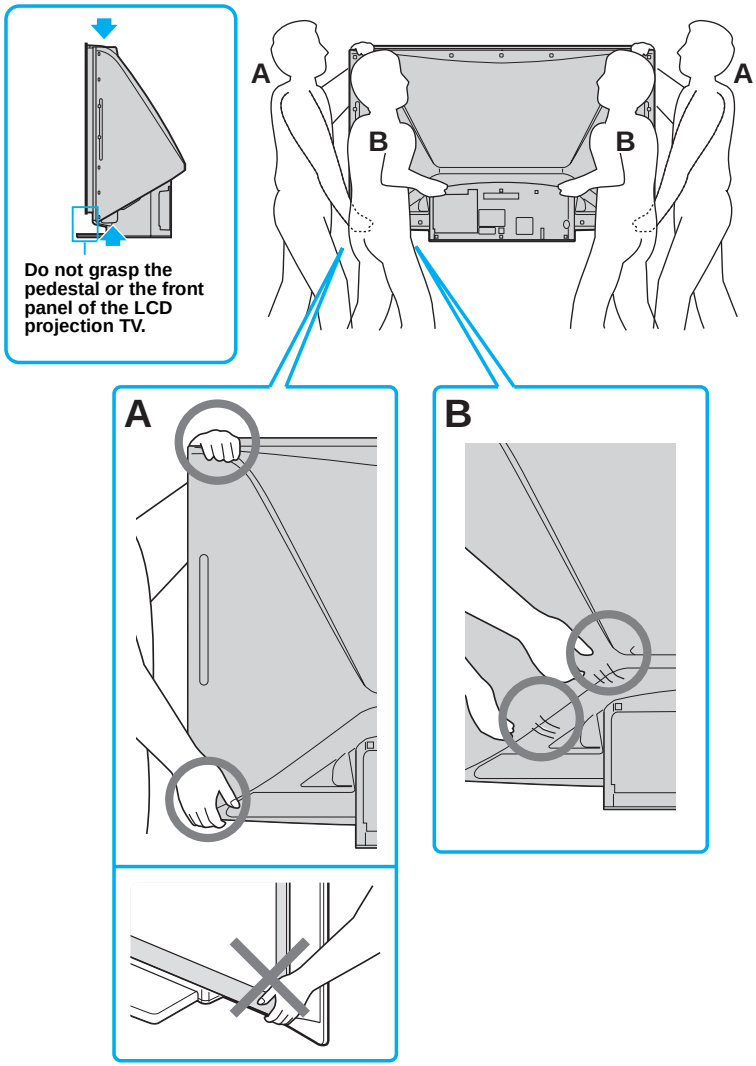

To Prevent the LCD Projection TV from Falling Down

Pay special attention to children around the LCD projection TV. If children should climb onto or push the LCD projection TV or its stand SU-GW3 (not supplied), it may fall down.

When Installing Your LCD Projection TV Against a Wall

Keep your LCD projection TV at least 10 cm (4 inches) from the wall.

Recommended Viewing Area

The picture quality may be affected by your viewing position.

For the best picture quality, install your LCD projection TV within the areas shown below.

Sit at least 2.2 m (approx. 7 ft.) for KDF-60XBR950 or 2.6 m (approx. 8 ft.) for KDF-70XBR950 away from your LCD projection TV, and within 60° of the vertical viewing area, and 130° of the horizontal viewing area.

Horizontal Viewing Area

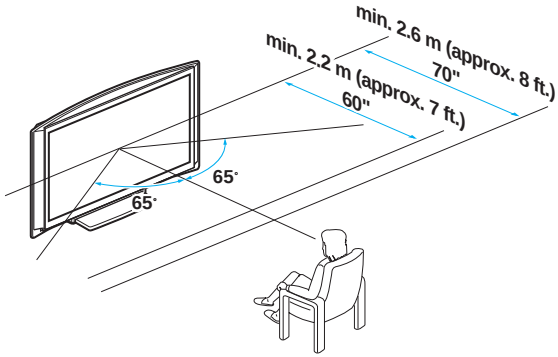

Vertical Viewing Area

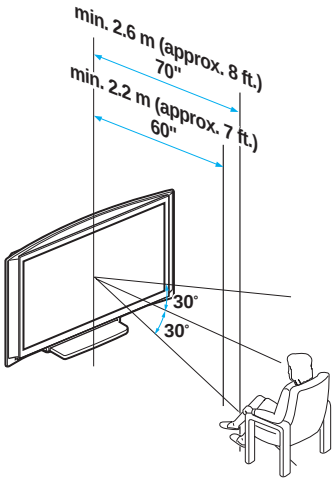

LCD Projection TV Controls and Connectors

Front Panel Menu Controls

The front panel menu controls allow access to the on-screen menus without using the remote control. Pressing MENU brings up the on-screen menus. The arrow buttons move the on-screen cursor in the menus and by pressing the button selects the menu item.

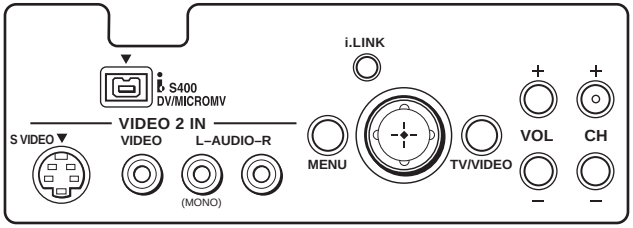

How to open and close the front panel

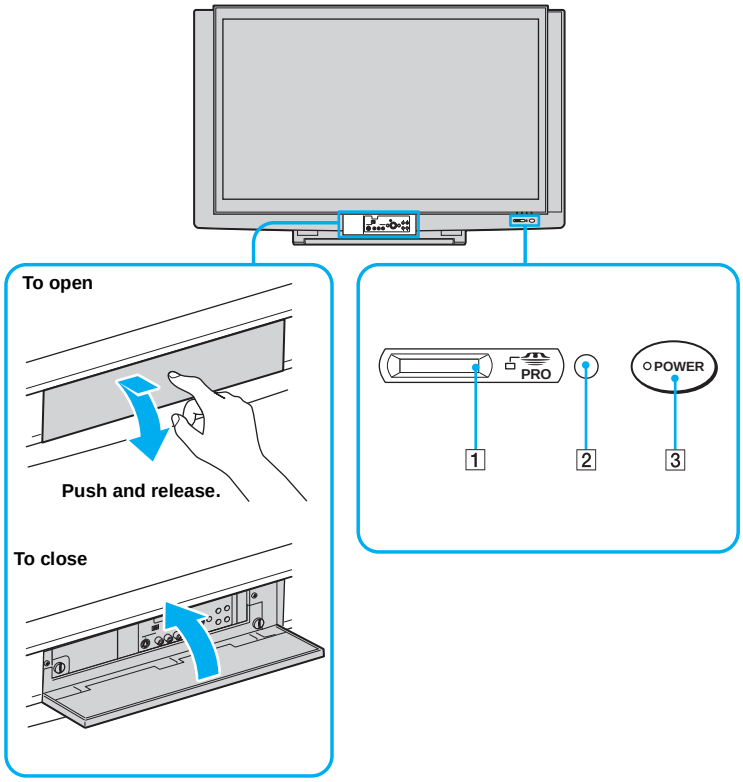

(Continued)

Item	Description
1 Memory Stick slot	Memory Stick insertion slot. For details, see “Inserting and Removing a Memory Stick” on page 66.
2 Memory Stick indicator	When lit, indicates that the Memory Stick is being read. (Do not remove the Memory Stick when the indicator is lit.)
3 POWER	Press to turn on and off the LCD projection TV.

LCD Projection TV Rear and Front Panel Connectors

Rear of LCD projection TV

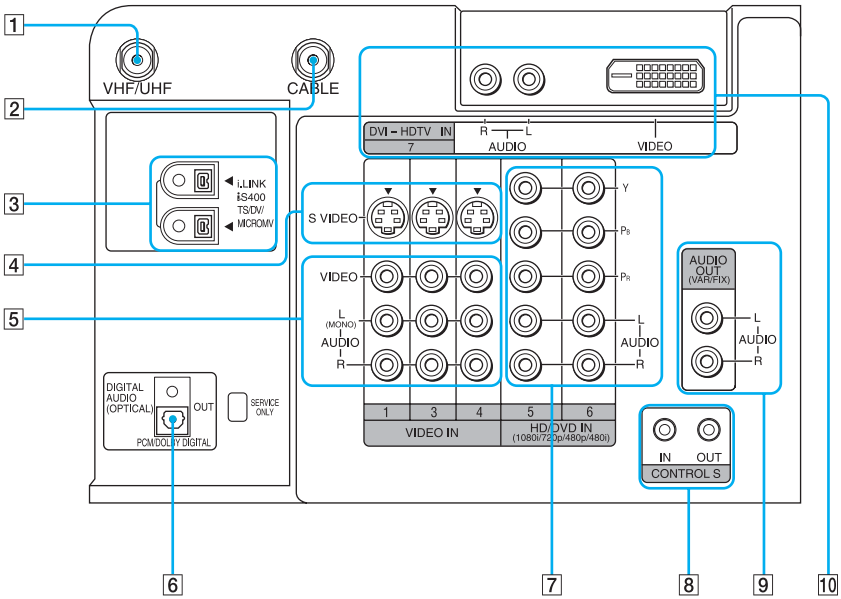

Front Panel of LCD projection TV

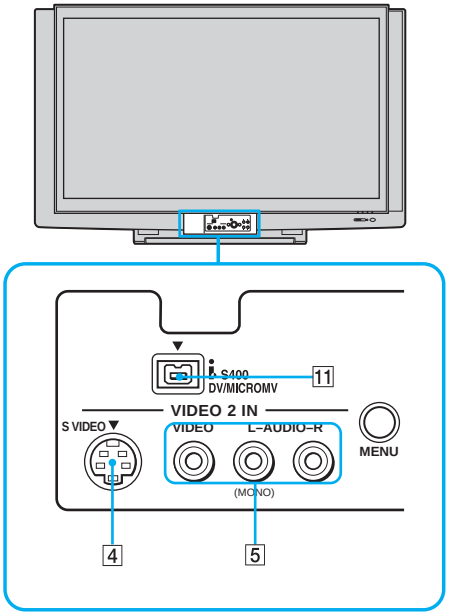

Front panel connectors are in the control panel cover. To open and close the cover, refer to page 21.

	Connection	Description
1	VHF/UHF	Connects to your VHF/UHF antenna or cable box output jack.
2	CABLE	Connects to your cable signal. This CABLE input jack, in conjunction with the VHF/UHF input jack, lets you set up your LCD projection TV to switch between scrambled channels (coming through a cable box) and unscrambled cable channels. For details, see page 28.
3	i.LINK	Connects to i.LINK-compatible devices. These terminals are not intended for connection with personal computers.
4	S VIDEO (Front and rear)	Connects to the S VIDEO OUT jack of your VCR or other S VIDEO-equipped video component. Provides better picture quality than the VHF/UHF jacks or the Video IN jack.
5	VIDEO/ (L/R) AUDIO (Front and rear)	Connects to the audio and video OUT jacks on your VCR or other video component. A fourth video input (VIDEO 2) is located on the front panel of the LCD projection TV.

(Continued)

	Connection	Description
6	DIGITAL AUDIO (OPTICAL) OUT (PCM/DOLBY* DIGITAL)	Connects to the optical audio input of a digital audio component that is PCM/Dolby digital compatible.
7	HD/DVD IN (1080i/720p/480p/480i)	Connects to your DVD player's or Digital Set-top box's component video (Y, PB, PR) and audio (L/R) jacks.
8	CONTROL S IN/OUT	To control other Sony equipment with the LCD projection TV's remote control, connect the CONTROL S IN jack of the equipment to the CONTROL S OUT jack on the LCD projection TV with the CONTROL S cable. To control the LCD projection TV with a remote control for another Sony product, connect the CONTROL S OUT jack of the equipment to the CONTROL S IN jack on the LCD projection TV with the CONTROL S cable.
9	AUDIO OUT (VAR/FIX) L/R	Connects to the left and right audio inputs of your audio or video component.
10	DVI-HDTV VIDEO AUDIO L/R (VIDEO 7 IN)	Can accommodate a copy-protected digital connection (HDCP**) to other devices (such as digital set-top boxes) that have compatible interfaces. The DVI-HDTV input terminal is compliant with the EIA-861 standard and is not intended for use with personal computers. See the instruction manual that came with your equipment for details about connecting and using it with the LCD projection TV.
11	i.LINK	Connects to the i.LINK jack on your i.LINK-compatible portable device. Provides a secure digital connection between your LCD projection TV and your i.LINK-compatible portable device.

* Manufactured under license from Dolby Laboratories.
"Dolby" and the double-D symbol are trademarks of Dolby Laboratories.

** High-bandwidth Digital Content Protection

Basic Connections: Connecting a Cable or Antenna

The way in which you will connect your LCD projection TV varies, depending on how your home receives a signal (cable, cable box, antenna) and whether or not you plan to connect a VCR.

If You Are Connecting	See Page
Cable or Antenna Only ❑ No cable box or VCR	26
Cable Box and Cable Only ❑ Cable box unscrambles only some channels (usually premium channels) ❑ No VCR	28
Cable Box Only ❑ Cable box unscrambles all channels ❑ No VCR	30

If you are connecting a VCR

❑ See the connections described on pages 32 and 33.

Cable or Antenna Only

For best results, use one of the following connections if you are connecting a cable or an antenna and you:

- Do not need a cable box to unscramble channels. (If you have a cable box, see pages 28 to 30.)
- Do not intend to connect a VCR. (If you have a VCR, see pages 32 and 33.)

The connection you choose depends on the cable type you have in your home, as described below.

75-ohm coaxial cable (usually found in newer homes)

Cable Type	Connect As Shown
VHF Only or combined VHF/ UHF	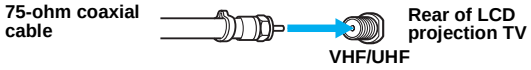
Cable	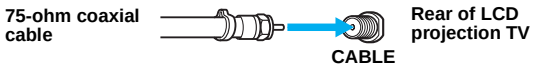

300-ohm twin lead cable (usually found in older homes)

Cable Type	Connect As Shown
VHF Only or UHF Only or combined VHF/UHF	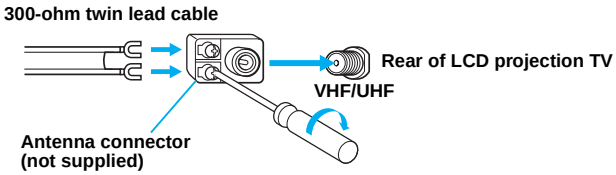

75-ohm coaxial and 300-ohm twin lead cable (found in some homes)

Cable Type	Connect As Shown
VHF and UHF	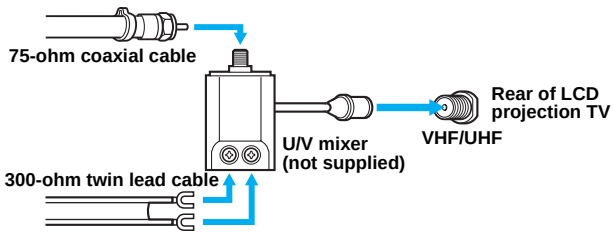

Notes on Using This Connection

To Do This ...	Do This ...
Switch the TV's input between the cable and antenna	Press ANT to switch back and forth between the TV's VHF/UHF and CABLE inputs.

✍ It is highly recommended to connect the antenna using a 75-ohm coaxial cable to get optimum picture quality. A 300-ohm twin lead cable can be easily affected by radio noise and the like, resulting in signal deterioration. If you use a 300-ohm twin lead cable, keep it away as far as possible from the LCD projection TV.

✍ Do not use an indoor antenna because it is especially susceptible to radio noise.

Cable Box and Cable Only

For best results, use this connection if:

- Your cable company scrambles some channels, such as premium channels (which requires you to use a cable box), but does not scramble all channels.
- You do not have a VCR. (If you have a VCR, see pages 32 and 33.)

With this connection you can:

- Use the LCD projection TV remote control to change channels coming through the cable box to the LCD projection TV's VHF/UHF input jack. (You must first program the remote control for your specific cable box; see "Programming the Remote Control" on page 48.)
- Use the LCD projection TV remote control to change channels coming directly into the LCD projection TV's CABLE input. (The LCD projection TV's tuner provides a better signal than the cable box.)

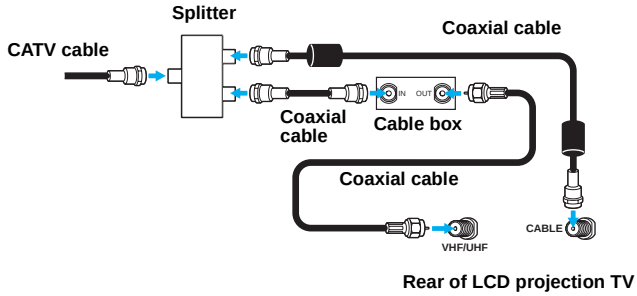

About Using This Connection with Dual Picture (Twin View, etc.) Features

With this connection, you can use all the dual picture features for unscrambled channels coming directly into the LCD projection TV's CABLE input jack.

Notes on Using This Connection

To Do This ...	Do This ...
Use the cable box	Tune the LCD projection TV to the channel the cable box is set to (usually channel 3 or 4) and then use the cable box to switch channels.
Set up the LCD projection TV remote control to operate the cable box	Program the remote control. See "Programming the Remote Control" on page 48.
Activate the remote control to operate the cable box	Press FUNCTION repeatedly until the SAT/CABLE indicator lights up.

Prevent the accidental switching of TV channels	When using the cable box, you need the LCD projection TV to stay on the channel the cable box is set to (usually channel 3 or 4). You can use the LCD projection TV's Channel Fix feature to lock in a specific channel. For details, see "Using the Channel Menu" on page 96.
Switch the LCD projection TV's input between the cable box and cable	Press ANT to switch back and forth between the LCD projection TV's VHF/UHF (scrambled channels) and CABLE (unscrambled) inputs.

Cable Box Only

For best results, use this connection if:

- ❑ Your cable company scrambles all channels, which requires you to use a cable box.
- ❑ You do not have a VCR. (If you have a VCR, see pages 32 and 33.)

With this connection you can:

- ❑ Use the LCD projection TV remote control to change channels coming through the cable box to the LCD projection TV's VHF/UHF jack. (You must first program the remote control for your specific cable box.)

About Using This Connection with Dual Picture (Twin View, etc.) Features

With this connection, all channels come into the LCD projection TV through your cable box and only one unscrambled signal is sent to the LCD projection TV, so you cannot use the dual picture features. If some of your channels are scrambled, but others are not, consider using the "Cable Box and Cable Only" connection on page 28 instead.

To connect the cable box

1. Connect the CATV cable to the cable box's input jack.
2. Use a coaxial cable to connect the cable box's output jack to the LCD projection TV's VHF/UHF jack.
3. Run the Auto Setup program, as described in "Setting Up the LCD Projection TV Automatically" on page 45.

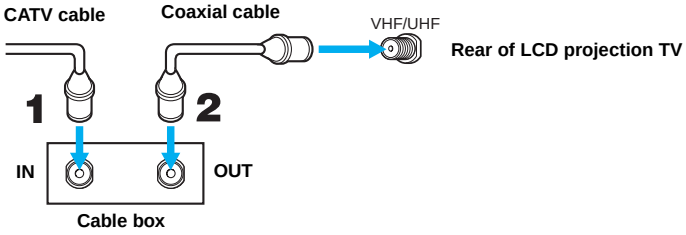

Notes on Using This Connection

To do this...	*Do This ...*
Use the cable box	Tune the LCD projection TV to the channel the cable box is set to (usually channel 3 or 4) and then use the cable box to switch channels.
Set up the LCD projection TV remote control to operate the cable box	Program the remote control. See "Programming the Remote Control" on pages 48.

Activate the remote control to operate the cable box	Press FUNCTION repeatedly until the SAT/CABLE indicator lights up.
Prevent the accidental switching of TV channels	When using the cable box, you need the LCD projection TV to stay on the channel the cable box is set to (usually channel 3 or 4). You can use the LCD projection TV's Channel Fix feature to lock in a specific channel. For details, see "Using the Channel Menu" on page 96.

Connecting a VCR and Cable

Use this hookup if:

- You have cable TV that does not require a cable box.

Disconnect all power sources before making any connections.

1. Connect the cable TV cable to the VCR's IN jack.
2. Using a coaxial cable, connect the VCR's OUT jack to the LCD projection TV's CABLE jack.
3. Using AUDIO and S VIDEO cables, connect the VCR's Audio and S Video OUT jacks to the LCD projection TV's AUDIO and S VIDEO IN jacks.

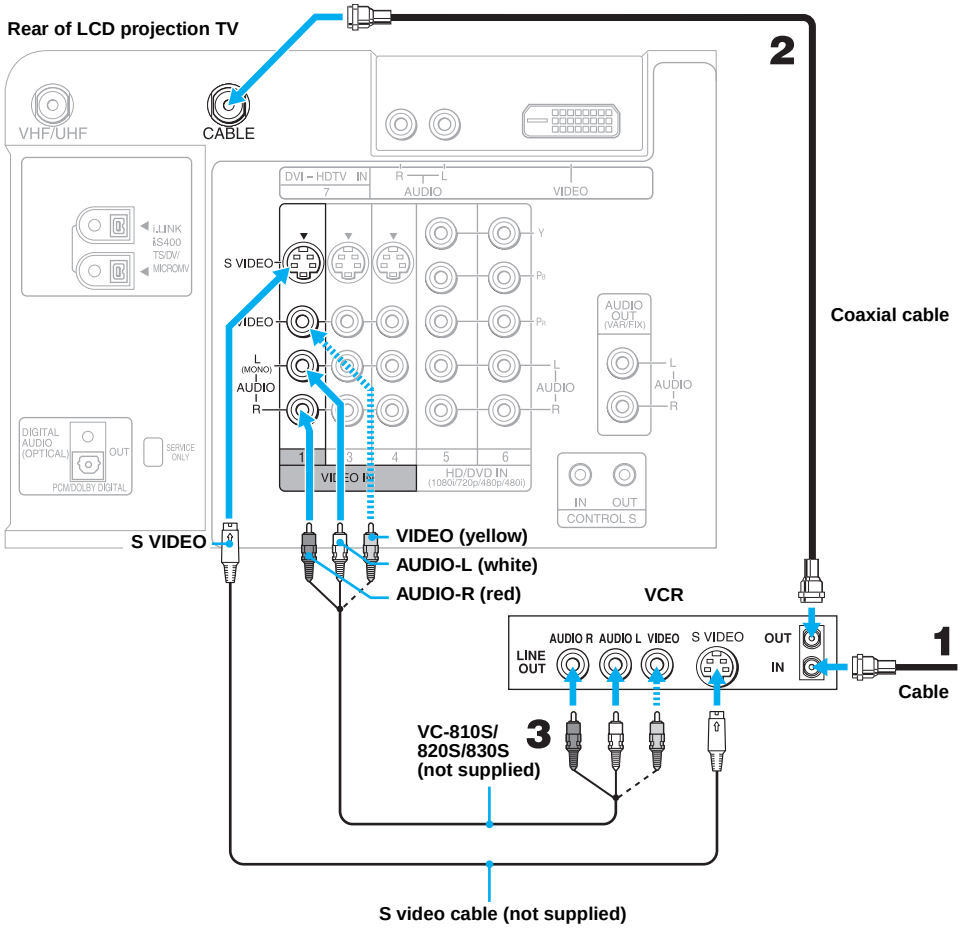

If your VCR is not equipped with S VIDEO, use a VIDEO cable (yellow) instead of the S VIDEO cable.

Connecting a VCR and Cable Box

Use this hookup if:

- Your cable TV company scrambles some channels, but not all of them (pay channels vs. regular cable channels) and you need to use a cable box, and
- You want to enjoy the Twin View feature.

With this setup you can:

- Use the LCD projection TV remote control to change channels on your cable box when the signal is scrambled. To program your Sony remote control to operate your cable box, see “Programming the Remote Control” on page 48.
- Use the LCD projection TV remote control to change channels using your LCD projection TV when the signal is not scrambled. Your LCD projection TV’s tuner provides a better signal than the cable box.
- Use the Twin View feature. (When all channels are routed through your cable box, only one signal is sent to the LCD projection TV, so you cannot use the Twin View feature.)

Disconnect all power sources before making any connections.

1. Connect the CATV cable to the single (input) jack of the splitter.
2. Use a coaxial cable to connect one of the splitter’s two output jacks to the TV’s CABLE jack.
3. Use a coaxial cable to connect the splitter’s other output jack to the cable box’s input jack.
4. Use a coaxial cable to connect the cable box’s output jack to the VCR’s RF input jack.
5. Use an A/V cable to connect the VCR’s A/V output jacks to the LCD projection TV’s A/V input jacks.
6. Use a coaxial cable to connect the VCR’s RF output jack to the LCD projection TV’s VHF/UHF jack.
7. Run the Auto Setup program, as described in “Setting Up the LCD Projection TV Automatically” on page 45.

✍ To view scrambled channels, set your LCD projection TV to channel 3 or 4 (depending on your cable box output). Change channels using your cable box.

(Continued)

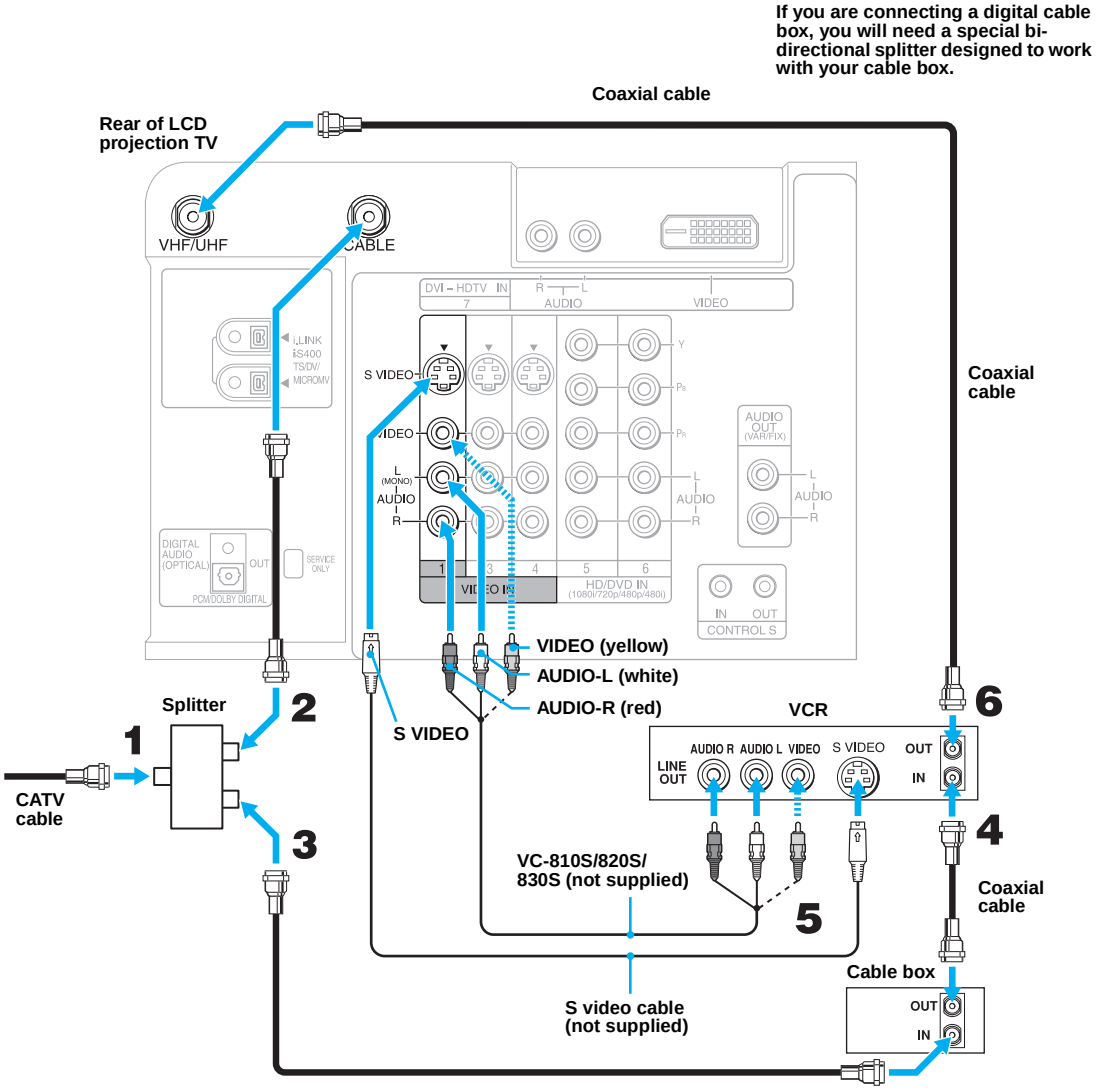

✍ If your VCR is not equipped with S VIDEO, use a VIDEO cable (yellow) instead of the S VIDEO cable.

✍ You will not be able to change channels on the VCR. Set your LCD projection TV and VCR to channel 3 or 4, depending on your cable box channel output.

✍ Pressing ANT on the remote control switches between the channels coming in through the cable box (scrambled) and those coming directly to the LCD projection TV (unscrambled).

Connecting Two VCRs for Tape Editing

If you connect two VCRs, you can record from one VCR to the other while using your LCD projection TV to monitor what is being recorded.

Disconnect all power sources before making any connections.

1 Using AUDIO and VIDEO cables, connect the playback VCR's Audio and Video OUT jacks to the recording VCR's Audio and Video IN jacks.

2 Using AUDIO and VIDEO cables, connect the recording VCR's Audio and Video OUT jacks to the LCD projection TV's AUDIO and VIDEO IN jacks.

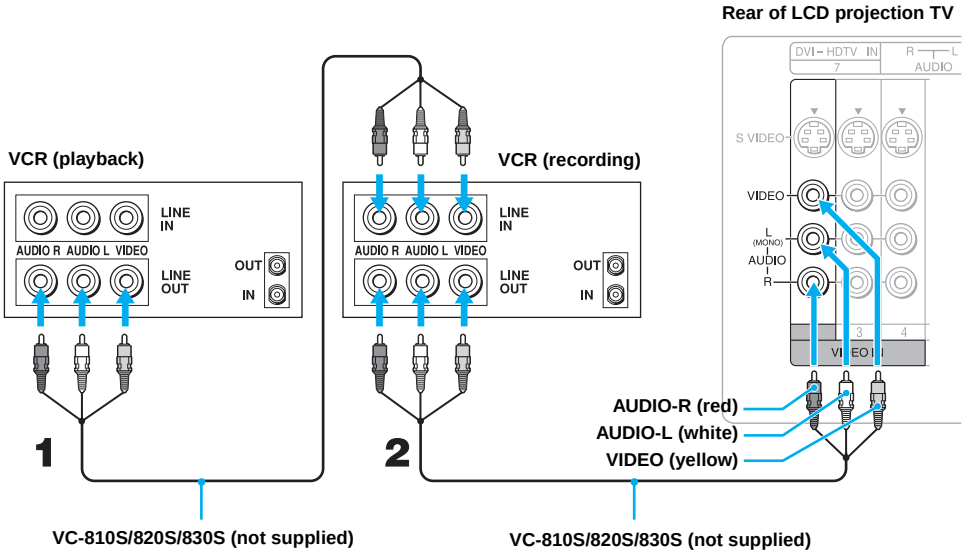

✍ To perform tape editing, set the LCD projection TV to the video input intended for playback by pressing TV/VIDEO on the remote control.

✍ You may need to change the video input on your VCR. Consult your VCR's operating manual for instructions.

✍ If your VCRs have an S VIDEO jack: For best picture quality, use an S VIDEO connection instead of the yellow video cable on your combined A/V cable.
Using an S VIDEO cable, connect the playback VCR's S VIDEO OUT jack to the recording VCR's S VIDEO IN jack. S VIDEO does not provide audio, so audio cables must be connected to provide sound.

✍ You cannot record signals from equipment connected to the Y, P_B, P_R input.

Connecting a Satellite Receiver

Disconnect all power sources before making any connections.

1. Connect the satellite antenna cable to the satellite receiver's SATELLITE IN jack.
2. Using AUDIO and S VIDEO cables, connect the satellite receiver's AUDIO and S VIDEO OUT jacks to the LCD projection TV's AUDIO and S VIDEO IN jacks.
3. Connect a coaxial cable from your cable or antenna to the LCD projection TV's VHF/UHF or CABLE jack.

✍ If your satellite receiver is not equipped with S VIDEO, use a VIDEO cable (yellow) instead of the S VIDEO cable.

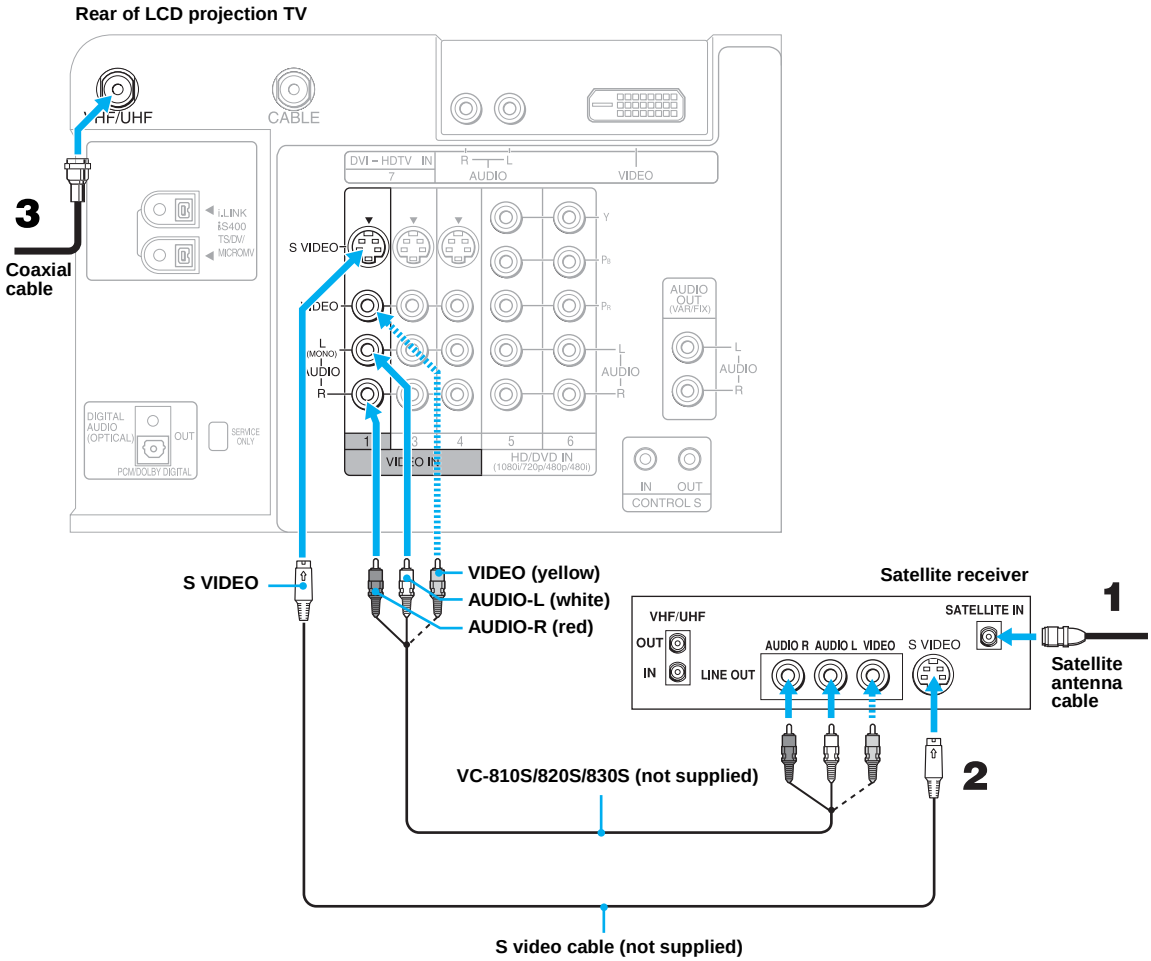

Connecting a Satellite Receiver with a VCR

Disconnect all power sources before making any connections.

1. Connect the satellite antenna cable to the satellite receiver's SATELLITE IN jack.
2. Connect the CATV cable to the VCR's VHF/UHF IN jack.
3. Using a coaxial cable, connect the VCR's VHF/UHF OUT jack to the LCD projection TV's CABLE jack.
4. Using AUDIO and S VIDEO cables, connect the satellite receiver's AUDIO and S VIDEO OUT jacks to the VCR's AUDIO and S VIDEO IN jacks.
5. Using AUDIO and S VIDEO cables, connect the VCR's AUDIO and S VIDEO OUT jacks to the LCD projection TV's AUDIO and S VIDEO IN jacks.

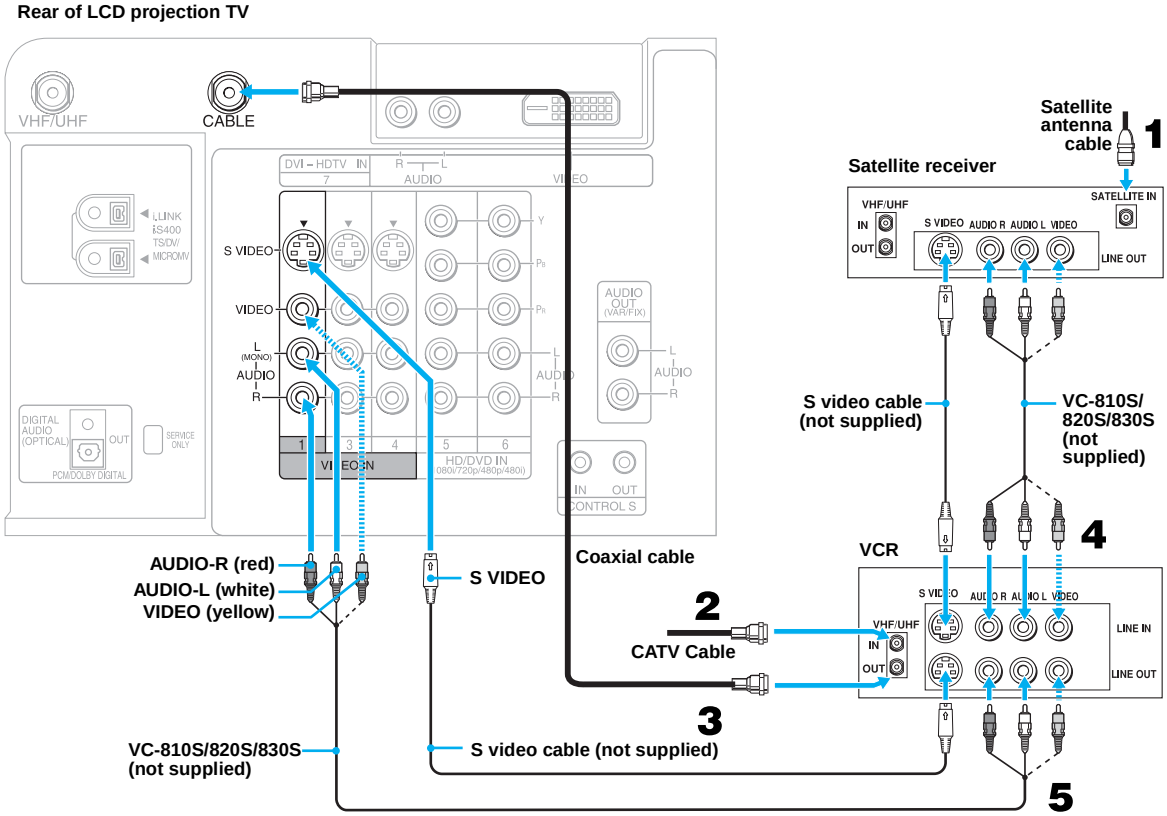

(Continued)

✍ Be sure your VCR's video input is set correctly. Consult your VCR's operating manual for instructions.

✍ Use TV/VIDEO to select
- VIDEO 1 to watch satellite TV or the VCR (your VCR must be turned on).
- VHF/UHF to watch cable TV.

✍ If your VCR or satellite receiver is not equipped with S VIDEO, use a VIDEO cable (yellow) instead of the S VIDEO cable.

Connecting an Audio Receiver

Disconnect all power sources before making any connections.

Using audio cables, connect the LCD projection TV's AUDIO OUT (VAR/FIX) jacks to the audio receiver's audio LINE IN jacks.

Rear of LCD projection TV

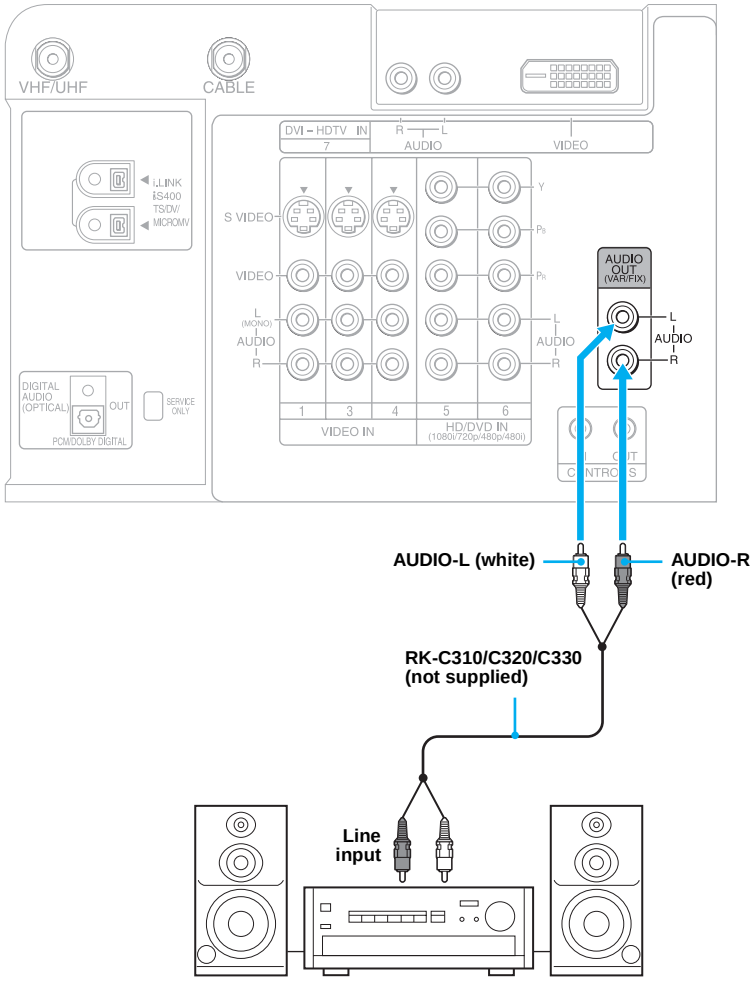

Connecting a DVD Player with Component Video Connectors

This is the preferred hookup to use if:

- Your DVD player has component (Y, B-Y, R-Y) jacks.

Disconnect all power sources before making any connections.

1. Using three separate component video cables, connect the DVD player's Y, B-Y and R-Y jacks to the Y, PB and PR jacks on the LCD projection TV. Use the HD/DVD IN 5 or 6 connections.

   ✍ The Y, B-Y and R-Y jacks on your DVD player are sometimes labeled Y, CB and CR, or Y, PB and PR. If so, connect the cables to like colors.

2. Using an audio cable, connect the DVD player's Audio OUT jacks to the LCD projection TV's AUDIO IN jacks. Be sure to use the same row of inputs that you used for the video connection (HD/DVD IN 5 or 6).

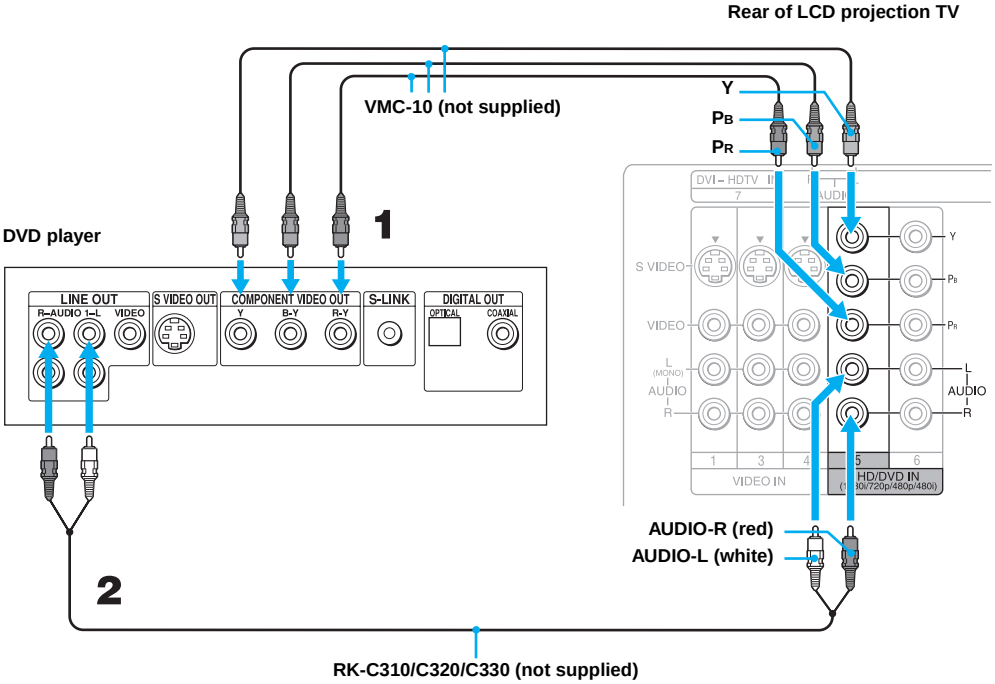

✍ To take advantage of the Wide Screen modes, set the TV's aspect ratio to 16:9 on your DVD player. For details, refer to the operating instructions supplied with your DVD player.

Connecting a DVD Player with A/V Connectors

Use this hookup if:

- Your DVD player does not have component (Y, PB, PR) jacks.

✍ If your DVD player has video component output connectors: for best picture quality use the connection described on page 40.

Disconnect all power sources before making any connections.

1. Using audio cables, connect the DVD player's Audio OUT jacks to the LCD projection TV's AUDIO IN jacks.
2. Using an S VIDEO cable, connect the DVD player's S VIDEO jack to the LCD projection TV's S VIDEO jack.

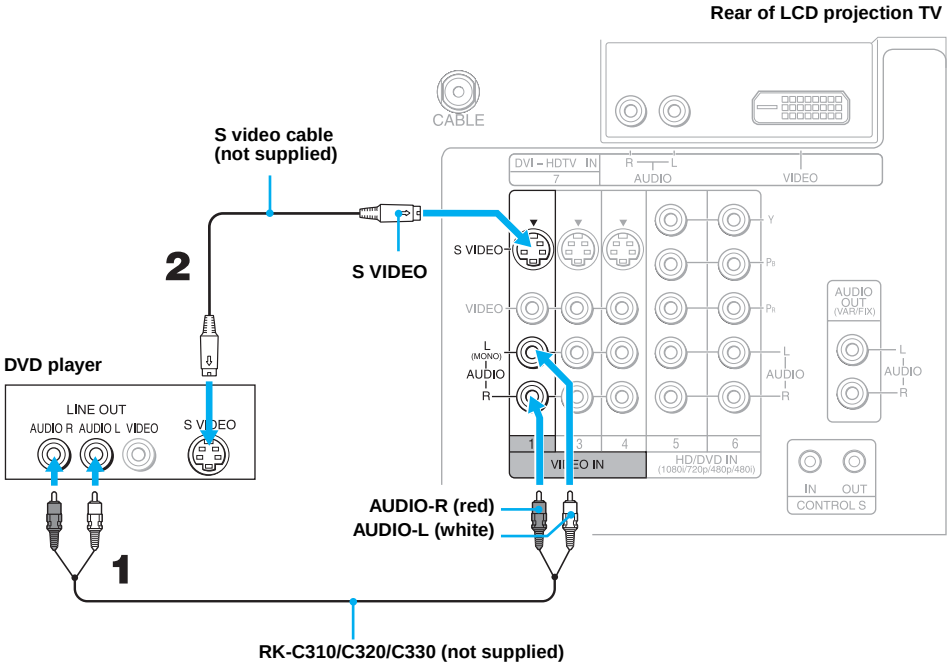

✍ To take advantage of the Wide Screen modes, set the TV's aspect ratio to 16:9 on your DVD player. For details, refer to the operating instructions supplied with your DVD player.

✍ Use TV/VIDEO on the remote control to switch between the VCR, DVD player and cable TV inputs.

✍ If your VCR is not equipped with S VIDEO, use a VIDEO cable (yellow) instead of the S VIDEO cable.

Connecting a Camcorder

For easy connection of the camcorder, the LCD projection TV has front Audio and Video inputs (shown below). However, if you prefer, you can also connect the camcorder to the LCD projection TV's rear AUDIO and VIDEO IN jacks.

Using AUDIO and S VIDEO cables, connect the camcorder's Audio and S VIDEO OUT jacks to the LCD projection TV's AUDIO and S VIDEO IN jacks.

- If you have a mono camcorder, connect its left audio output to the LCD projection TV's AUDIO L (MONO) jack.
- If your camcorder is not equipped with S VIDEO, use a VIDEO cable (yellow) instead of the S VIDEO cable.

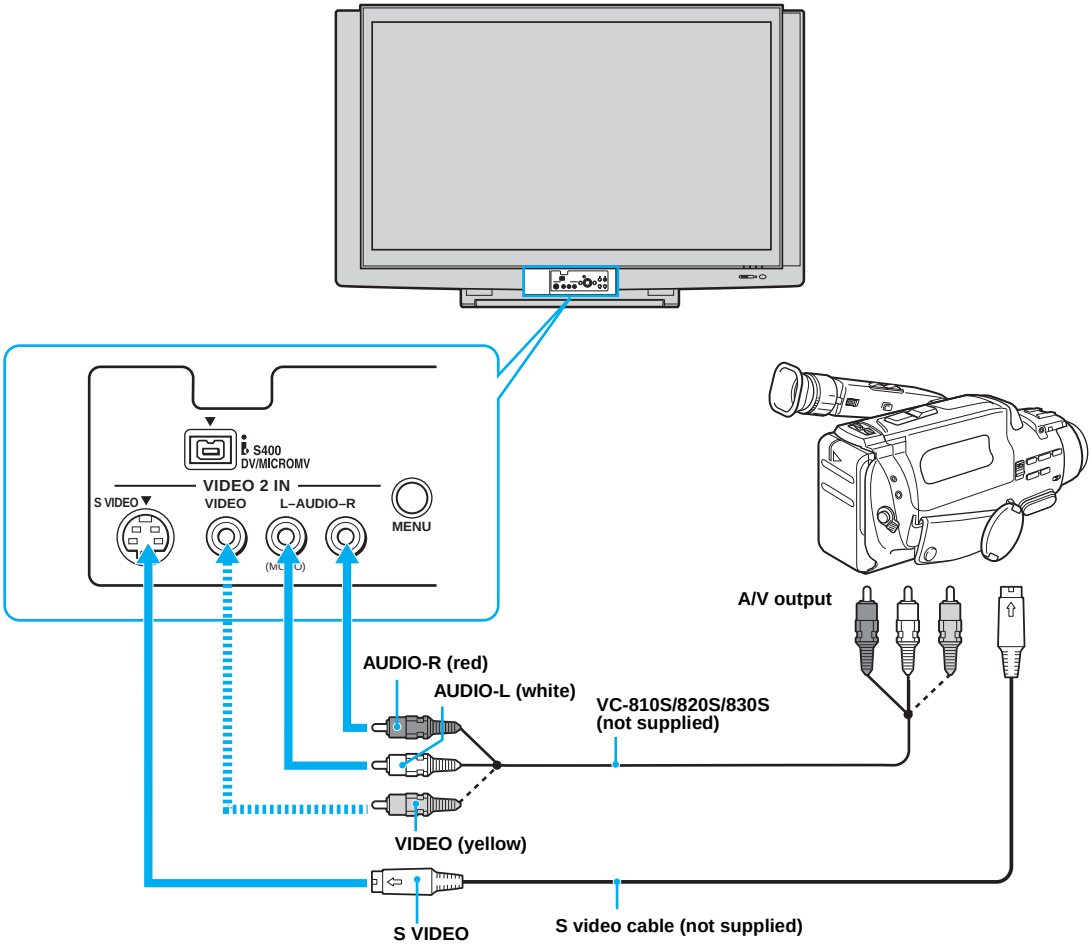

Connecting a Device with an Optical IN Connector

You can use the LCD Projection TV's DIGITAL AUDIO (OPTICAL) OUT jack to connect a digital audio device that is PCM/Dolby digital compatible, such as an audio amplifier.

Using an optical cable, connect the device's OPTICAL IN jack to the LCD Projection TV's DIGITAL AUDIO (OPTICAL) OUT jack.

Rear of LCD projection TV

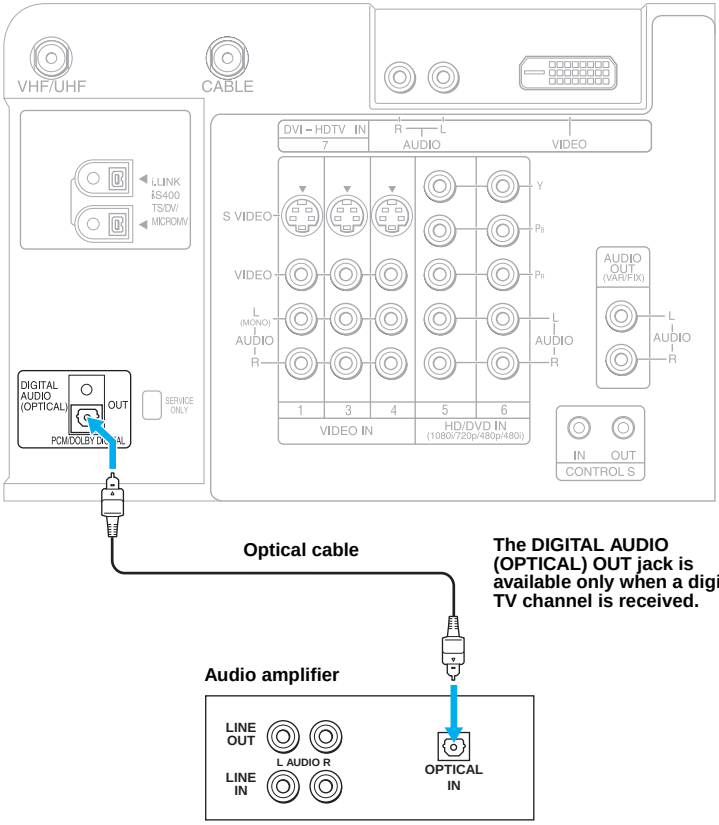

Using the CONTROL S Feature

CONTROL S allows you to control your LCD projection TV system and other Sony equipment with one remote control. In addition to allowing you to control multiple devices with one remote control, the CONTROL S feature allows you to always point your remote control at your LCD projection TV, instead of having to point it at the other equipment, which might be hidden or out of direct line of sight.

Rear of LCD projection TV

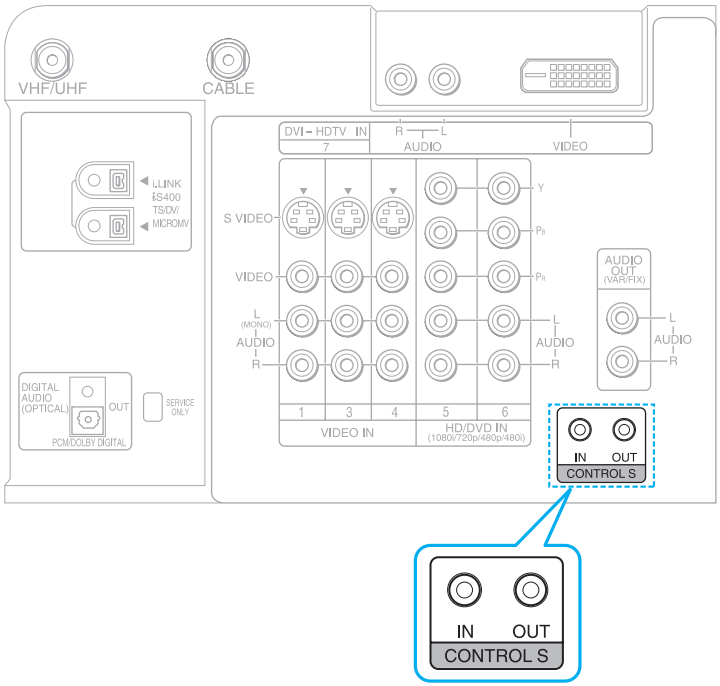

Setting Up the LCD Projection TV Automatically

After you finish connecting your LCD projection TV, you need to run Auto Setup to set up available analog and digital channels. The Auto Program screen appears when you turn your LCD projection TV on for the first time after installing it. If you do not want to set up the channels at this time, you can do it later by using the Auto Program feature in the Channel menu (see page 96).

✍ The Auto Setup feature does not apply for installations that use a cable box for all channel selection.

Using Auto Setup

1. Press POWER on the front panel of your LCD projection TV to turn on the LCD projection TV.
   The Initial Setup screen appears.
2. Move the arrow button up or down to select the desired on-screen display language, and press the button.
   "Start auto program now?" appears.
3. Move the arrow button up or down to select "Yes," and press the button.
   Auto Program automatically creates a list of receivable channels.

✍ Auto Program may take up to 30 minutes to complete. A progress bar is displayed while the channel list is being created.

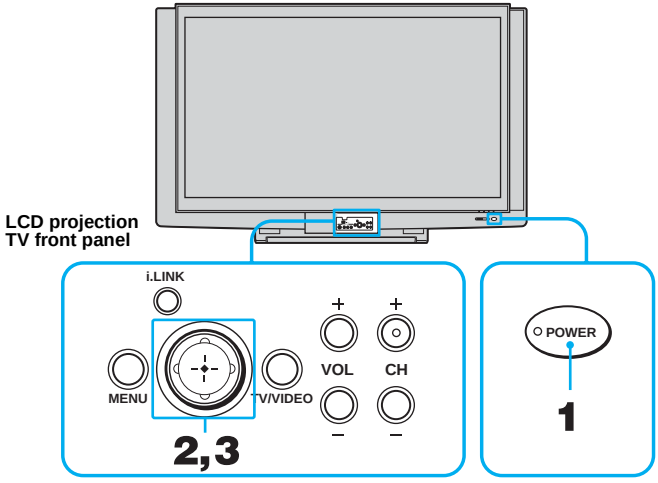

✍ You can run Auto Program by selecting it in the Channel menu, as described on page 96.

Using the Features

Using the Remote Control

The following table describes the buttons on the remote control that are for more advanced functions.

Button Descriptions

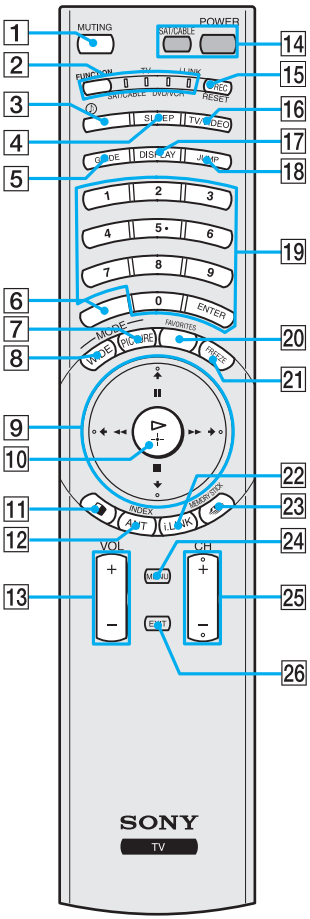

	Button	Description
1	MUTING	Press to mute the sound. Press again or press VOL + to restore the sound.
2	FUNCTION	Press repeatedly until the indicator of the equipment (TV, SAT/CABLE, DVD/VCR, i.LINK) that you want to operate lights up.
3	♪	Press repeatedly to step through the available audio effect modes: Virtual Dolby, TruSurround, Simulated, Off. For details, see “Selecting Audio Options” on page 92.
4	SLEEP	Press repeatedly until the TV displays the time in minutes (15, 30, 45, 60 or 90) that you want the LCD projection TV to remain on before shutting off. To cancel Sleep Timer, press SLEEP repeatedly until SLEEP OFF appears.
5	GUIDE	Press to display the digital program guide. If FUNCTION is switched on SAT/CABLE Press to display the program guide of your satellite program provider.
6	·	Use with 0-9 and ENTER buttons to select digital channels (for example, 2.1). For details on selecting digital channels, see page 60.
7	PICTURE	Press repeatedly to step through the available video picture modes: Vivid, Standard, Pro. Also available in the Video menu. For details, see “Selecting Video Options” on page 88.
8	WIDE	Press to step through the wide screen modes: Wide Zoom, Normal, Full and Zoom. For details, see “Using Wide Screen Mode” on page 59.
9	↑/↓/←/→ ❚❚/■/◀◀/▶▶	When the menu is displayed, move the on-screen cursor. ❚❚: Pause ■: Stop ◀◀: Rewind ▶▶: Fast-Forward
10	▷	▷: Playback -✦- : When the menu is displayed, select the item.
11	◨	Turns on/off Twin View. For details, see “Using Twin View™” on page 55.

	Button	Description
12	ANT	Changes between the VHF/UHF input and the CABLE input.
		If FUNCTION is switched on SAT/CABLE
	INDEX	Displays index of your satellite program provider.
13	VOL +/–	Adjusts the volume.
14	POWER buttons (Green)	Turn on and off the LCD projection TV and other audio/video equipment you have programmed into the remote control. For instructions, see “Programming the Remote Control” on page 48.
15	REC	Record
	RESET	Press when in a menu to reset the settings to the factory defaults.
16	TV/VIDEO	Cycles through the video equipment connected to your LCD projection TV’s video inputs: TV, VIDEO 1, VIDEO 2, VIDEO 3, VIDEO 4, VIDEO 5, VIDEO 6 and VIDEO 7.
17	DISPLAY	Press once to display the current time and channel label (if set) and channel number. Press again to turn Display off. See page 104 for details on setting the time.
18	JUMP	Press to jump back and forth between two channels. The LCD projection TV alternates between the current channel and the last channel that was selected.
19	0 – 9 and ENTER	Press 0 - 9 to select a channel, the channel changes after 3 seconds. Press ENTER to select immediately.
20	FAVORITES	Displays the Favorite Channels list. For details, see “Using Favorite Channels” on page 54.
21	FREEZE	Freezes the window picture. Press again to restore the picture.
22	i.LINK	Press to display the i.LINK Control Panel. For information on using the i.LINK Control Panel, see page 83.
23	MEMORY STICK	Press to display the Memory Stick Menu. For details, see “Using the Memory Stick Viewer” on page 64.
24	MENU	Press to display the LCD projection TV on-screen menu. Press again to exit from the menu.
25	CH +/–	Scan through channels.
		To scan rapidly through the channels, press and hold down CH+ or CH–.
26	EXIT	Press to exit the on-screen menu or display and return to normal viewing.

Programming the Remote Control

The remote control is preset to operate Sony brand video equipment.

Function	Equipment	Programmable Code Number
DVD/VCR	Sony DVD player	751
SAT/CABLE	Sony DSS tuner	801
i.LINK	Sony DVD player (i.LINK)	901

If you have video equipment other than Sony brand that you want to control with the LCD projection TV's remote control, use the following procedure to program the remote control.

✍ The equipment must have infrared (IR) remote capability in order to be used with the remote control.

1. Turn to the list of "Manufacturer's Codes" on page 49, and find the three-digit code number for the manufacturer of your equipment. (If more than one code number is listed, use the number listed first.)
2. Press FUNCTION repeatedly until the DVD/VCR, SAT/CABLE or i.LINK indicator lights up.
3. Press SAT/CABLE for five seconds until the indicator of the selected input flashes.
4. While the desired indicator is flashing, enter the three-digit manufacturer's code number.
5. Press ENTER.

   ✍ You must do step 5 within 10 seconds of step 4, or you must redo steps 4 through 5.

6. To check if the code number works, aim the LCD projection TV's remote control at the equipment and press POWER that corresponds with that equipment. If it responds, you are done. If not, try using another code listed for that manufacturer.

Notes

- If more than one code number is listed, try entering them one by one until you come to the correct code for your equipment.
- If you enter a new code number, the code number you previously entered at that setting is erased.
- In some cases, you may not be able to operate your equipment with the supplied remote control. In such cases, use the equipment's own remote control unit.
- Whenever you remove the batteries to replace them, the code numbers may revert to the factory setting and must be reset.

Manufacturer's Codes

VCRs

Manufacturer	Code
Sony	301, 302, 303
Admiral (M. Ward)	327
Aiwa	338, 344
Audio Dynamic	314, 337
Broksonic	319, 317
Canon	309, 308
Citizen	332
Craig	302, 332
Criterion	315
Curtis Mathes	304, 338, 309
Daewoo	341, 312, 309
DBX	314, 336, 337
Dimensia	304
Emerson	319, 320, 316, 317, 318, 341
Fisher	330, 335
Funai	338
General Electric	329, 304, 309
Go Video	322, 339, 340
Goldstar	332
Hitachi	306, 304, 305, 338
Instant Replay	309, 308
JC Penney	309, 305, 304, 330, 314, 336, 337
JVC	314, 336, 337, 345, 346, 347
Kenwood	314, 336, 332, 337
LG	332
LXI (Sears)	332, 305, 330, 335, 338
Magnavox	308, 309, 310
Marantz	314, 336, 337
Marta	332
Memorex	309, 335
Minolta	305, 304
Mitsubishi/ MGA	323, 324, 325, 326
Multitech	325, 338, 321
NEC	314, 336, 337
Olympic	309, 308
Optimus	327
Orion	317
Panasonic	308, 309, 306, 307
Pentax	305, 304
Philco	308, 309
Philips	308, 309, 310
Pioneer	308
Quasar	308, 309, 306
RCA/ PROSCAN	304, 305, 308, 309, 311, 312, 313, 310, 329
Realistic	309, 330, 328, 335, 324, 338
Sansui	314
Samsung	322, 313, 321
Sanyo	330, 335
Scott	312, 313, 321, 335, 323, 324, 325, 326
Sharp	327, 328
Signature 2000 (M. Ward)	338, 327
SV2000	338
Sylvania	308, 309, 338, 310
Symphonic	338
Tashiro	332
Tatung	314, 336, 337
Teac	314, 336, 338, 337
Technics	309, 308
Toshiba	312, 311
Wards	327, 328, 335, 331, 332
Yamaha	314, 330, 336, 337
Zenith	331

Laserdisc Players

Manufacturer	Code
Sony	701
Panasonic	704, 710
Pioneer	702

DVD Players

Manufacturer	Code
Sony	751
Sony (i.LINK)	901
General Electric	755
Hitachi	758
JVC	756
Magnavox	757
Mitsubishi	761
Oritron	759
Panasonic	753
Philips	757
Pioneer	752
RCA/Proscan	755
Samsung	758
Toshiba	754
Zenith	760

Cable Boxes

Manufacturer	Code
Sony	230
Hamlin/Regal	222, 223, 224, 225, 226
Jerrold/G. I.	201, 202, 203, 204, 205, 206, 207, 208, 218
Oak	227, 228, 229
Panasonic	219, 220, 221
Pioneer	214, 215
Scientific Atlanta	209, 210, 211
Tocom	216, 217
Zenith	212, 213

Satellite Receivers

Manufacturer	Code
Sony	801
Dish Network	810
Echostar	810
General Electric	802
Hitachi	805
Hughes	804
Mitsubishi	809
Panasonic	803
RCA/ PROSCAN	802, 808
Toshiba	806, 807

Using Other Equipment with Your LCD Projection TV Remote Control

All Equipment

To Do This ...	Do This ...
Switch the LCD projection TV's input to the VCR, DVD player, or other connected equipment	Press TV/VIDEO repeatedly to cycle through the video equipment connected to the LCD projection TV's video inputs.
Set up the LCD projection TV remote control to operate non-Sony equipment	You must program the remote control the first time you use it. See "Programming the Remote Control" on page 48.

Operating a VCR

To Do This ...	Press
Activate the remote control to operate the VCR	FUNCTION repeatedly until the DVD/VCR indicator lights up.
Turn on/off	SAT/CABLE
Change channels	CH +/–
Record	● REC
Play	⊕
Stop	■
Fast forward	▶▶
Rewind the tape	◀◀
Pause	❚❚
Search the picture forward or backward	▶▶ or ◀◀ during playback (release to resume normal playback)

Operating a Satellite Receiver

To Do This ...	Press
Activate the remote control to operate the satellite receiver	FUNCTION repeatedly until the SAT/CABLE indicator lights up.
Turn on/off	SAT/CABLE
Select a channel	0-9, ENTER
Change channels	CH +/–
Back to previous channel	JUMP
Display channel number	DISPLAY
Display SAT Index	INDEX
Display SAT Guide	GUIDE
Display SAT Menu	MENU
Move highlight (cursor)	↑ ↓ ← →
Select item	⊕

Operating a Cable Box

To Do This ...	Press
Activate the remote control to operate the cable box	FUNCTION repeatedly until the SAT/CABLE indicator lights up.
Turn on/off	SAT/CABLE
Select a channel	0-9, ENTER
Change channels	CH +/–
Back to previous channel	JUMP

Operating a DVD Player

To Do This ...	Press
Activate the remote control to operate the DVD	FUNCTION repeatedly until the DVD/VCR indicator lights up.
Turn on/off	SAT/CABLE
Play	▷
Stop	■
Pause	❚❚
Step through different tracks of the disc	▶▶ to step forward or ◀◀ to step backward
Step through different chapters of a video disc	CH+ to step forward or CH– to step backward

Operating an MDP (Laserdisc Player)

To Do This ...	Press
Activate the remote control to operate the MDP	FUNCTION repeatedly until the indicator of the position you programmed for the MDP player lights up.
Turn on/off	SAT/CABLE
Play	▷
Stop	■
Pause	❚❚
Search the picture forward or backward	▶▶ or ◀◀ during playback (release to resume normal playback)
Search a chapter forward or backward	CH +/–

Watching the TV

Many TV features can be accessed directly through the remote control. The following will explain the function of some of the buttons found on your remote control.

Buttons for LCD Projection TV Operations

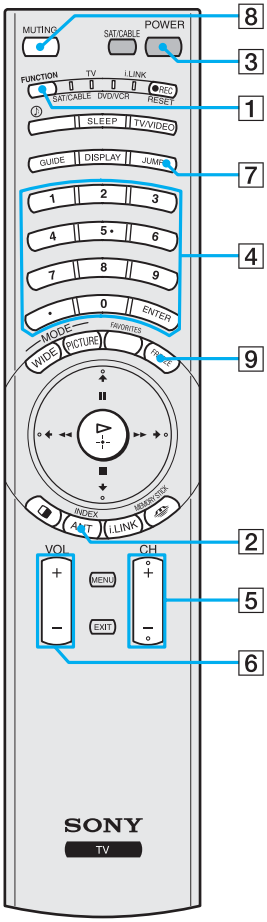

1 FUNCTION

Press until the TV indicator lights up.
This activates the remote control for use with the LCD projection TV.

2 ANT

Press to change between the VHF/UHF input and the CABLE input.

3 POWER

Press to turn the LCD projection TV on and off. If a video input indication (e.g., VIDEO 1, VIDEO 2) appears on the screen, press TV/VIDEO or CH +/ – until a channel number appears.

4 0-9, ·/– and ENTER

Use for direct channel selection. Press 0-9 to select an analog channel (for example, to select channel 10, press 1 and 0). The channel will change after 3 seconds, or you can press ENTER for immediate selection.

For digital subchannels, press 0-9, ·/–, press 0-9 again, and then ENTER.

You can also select digital channels using the digital program guide. See page 60 for details.

5 CH +/–

Press to scan through the channels (+ up or – down).

6 VOL +/–

Press to adjust the volume (+ up or – down).

7 JUMP

Press to jump back and forth between the current channel and the last channel selected.

8 MUTING

Press to mute the sound. “MUTING” will appear on the screen and will dim three seconds later. To restore the sound, press again or press VOL +.

9 FREEZE

This is useful when you need to copy down information that appears on the LCD projection TV’s screen (see “Using the Freeze Function” on page 58).

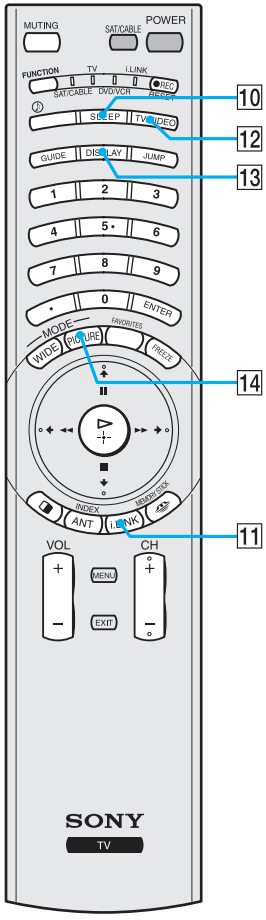

10 SLEEP

Press repeatedly to display the time in minutes (15, 30, 45, 60 or 90) that you want the LCD projection TV to remain on before shutting off.

To cancel Sleep Timer, press SLEEP repeatedly until SLEEP OFF appears.

11 i.LINK

Press to display a list of available i.LINK devices, and select the desired device from the list. See page 83 for details.

12 TV/VIDEO

Press repeatedly to scroll through available video inputs: TV, VIDEO 1, VIDEO 2, VIDEO 3, VIDEO 4, VIDEO 5, VIDEO 6 and VIDEO 7.

If you select Skip as a Video Label in the Setup menu, your LCD projection TV will skip the video input you selected (see "Video Label" on page 103).

13 DISPLAY

Press to display the channel number, current time and channel label (if set).

To turn the display off, press DISPLAY again.

14 PICTURE

Press PICTURE repeatedly to directly choose one of three different video modes that best suits the program you are watching.

Vivid: Select for enhanced picture contrast and sharpness.

Standard: Select to display a standard picture for home entertainment.

Pro: Select to display a picture with minimum enhancements.

When you select each mode, you can also adjust the picture quality (such as Picture, Brightness, Color, etc.) to suit your taste. For details, see "Mode" on page 88.

Using Favorite Channels

The Favorite Channel feature lets you select programs from a list of favorite channels that you preset.

Creating a List of Favorite Channels

1 Press MENU to display the Menu.

2 Press ← or → to highlight the Channel icon and press ⊕.

3 Press ⊕ to select Favorite Channels.

4 Press ↑ or ↓ to highlight a Favorite Channel number (1-16) and press ⊕.

5 Press ↑ or ↓ to highlight a channel you want to assign to the Favorite Channel number. A preview of the highlighted channel appears in the upper right of the screen.

Press ⊕ to select that channel as a Favorite Channel.

6 To add more channels to your favorites list, repeat steps 4-5.

To clear a Favorite Channel, press ↑ or ↓ to highlight the channel you want to clear. Press ⊕ and then press RESET.

7 Press MENU to exit the Menu.

For details on using the Channel Menu, see page 96.

Displaying a List of Favorite Channels

1 Press FAVORITES.

The Favorite Channel options appear.

2 Press ↑ or ↓ to highlight the channel you want to watch. The program of that channel appears in the preview window. Press ⊕ to select.

When the remote control mode is set to other than TV function, you can display the Favorite Channels. However, you cannot select the channel by using ↑ or ↓.

To assign Channel Labels (e.g., ABC, HBO, MTV, etc.) to channel numbers, as shown at right, use the Channel Label feature in the Channel Menu (see page 97).

Using Twin View™

Twin View enables you to watch two programs at the same time. You can also change the size of both the left and right pictures.

Activating Twin Pictures

To display twin pictures

1. Make sure your LCD projection TV is tuned to a working channel.
2. Press ◨.

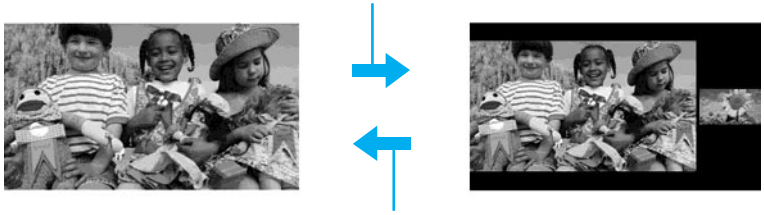

To cancel twin pictures

- Press ◨ again (or press ⊕).

Activating the Picture

Although two pictures appear on the screen at the same time, only one picture is active. Change the picture size by using the ↑ or ↓ button. For an active picture, you can:

- Change channels.
- Adjust the volume.
- Switch the input sources from VHF/UHF to cable by pressing ANT or TV/VIDEO to switch the video input.

To activate the right picture

- Press →.

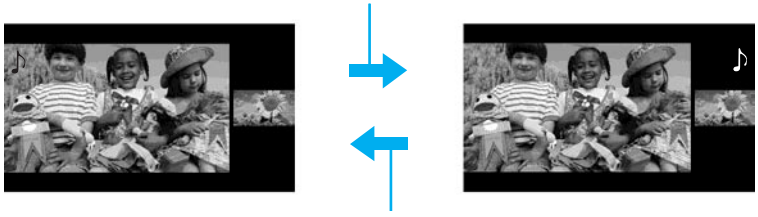

To activate the left picture

- Press ←.

(Continued)

✍ Hookups that affect your ability to use Twin View:

- If you are viewing all channels through the cable box, the Twin View feature will not work. The cable box only unscrambles one signal at a time, so the right picture will be the same as the left picture.
- You can watch a scrambled cable channel and another video source. Be sure your DVD player, VCR or satellite receiver are connected to one of the VIDEO IN 1-7 and antenna inputs on the rear of the LCD projection TV. Digital TV pictures, and pictures from equipment connected to HD/DVD IN 5 and 6, and DVI-HDTV IN 7, will only appear in the left picture, not in the right.

✍ The active picture is indicated by the ♪ icon.

Factors Affecting Twin View

- If you use a cable box to view all channels, the same channel appears in both windows because the cable box unscrambles only one channel at a time.
- If you use a cable box, you can view the cable box output in one window and view a different source (such as a VCR or DVD player) in the second window by using the TV/VIDEO button.
- Digital TV channels, as well as any sources connected to the VIDEO 5, VIDEO 6, and VIDEO 7 inputs display in the left window, but not the right.
- If you are viewing a 4:3 source and a 16:9 enhanced source (such as a DVD) side by side, the 4:3 source appears larger.
- Twin View does not display channels that are blocked by parental settings (see page 98).

Changing the Picture Size

The zoom feature lets you change the size of the left and right pictures.

To enlarge the left picture (reduce the right)

1 Press ← to activate the left picture (if not already activated).

2 Press ↑ to enlarge the picture and ↓ to reduce the picture.

To enlarge the right picture (reduce the left)

1 Press → to activate the right picture (if not already activated).

2 Press ↑ to enlarge the picture and ↓ to reduce the picture.

✍ When you adjust the twin screen sizes, the LCD projection TV memorizes the change. The next time you use the Twin View function, the memorized sizes appear.

Using the Freeze Function

The FREEZE button allows you to temporarily capture a program's picture. You can use this feature to write down information such as phone numbers, recipes, etc.

To use the Freeze function

1 When the program information you want to capture is displayed, press FREEZE.

2 The LCD projection TV switches to Twin View mode and displays the "frozen" picture on the right, while the current program continues on the left.

3 To cancel and return to normal viewing, press FREEZE.

✍ Freeze feature is not available if you are already in Favorite Channel (see page 54), or Twin View™ (see page 55) mode.

Using Wide Screen Mode

Wide Screen Mode lets you watch 4:3 normal broadcasts in several Wide Screen Modes (16:9 aspect ratio).

❑ Press WIDE repeatedly to toggle through the following Screen Mode settings.

You can also access the Screen Mode settings in the Screen menu. For details, see page 94.

Wide Zoom

Wide Zoom enlarges the 4:3 picture to fill the 16:9 screen, keeping the original image as much as possible.

Normal

Normal returns the 4:3 picture to its original size.

Full

Full Mode stretches the 4:3 picture horizontally only, to fill the 16:9 screen.

Zoom

Zoom Mode enlarges the 4:3 picture horizontally and vertically to an equal aspect ratio that fills the 16:9 screen. Useful for watching Letterbox movies.

When you change channels or inputs, the Screen Mode settings revert to Wide Zoom (or the 4:3 Default setting in the Screen menu). To retain the current Screen Mode setting as channels and inputs are changed, set 4:3 Default to Off. For details, see page 95.

Using the Digital Program Guide

Displaying the Digital Program Guide

This LCD projection TV is equipped to show digital programming, if a digital signal is present. The digital program guide and menus let you review program information, select digital channels and subchannels, set up your LCD projection TV's digital programming, and enable digital closed captioning.

✍ Analog channels are not available in this guide.

To display the digital program guide:

1. Tune your LCD projection TV to a digital channel by using the 0-9, ·, and ENTER buttons.
2. Press GUIDE on the LCD projection TV's remote control. The digital program guide appears, with the currently selected program showing in the background.

The digital program guide and menus are not available while using multipicture functions (Twin View, Freeze, i.LINK, Memory Stick, or Favorite Channels).

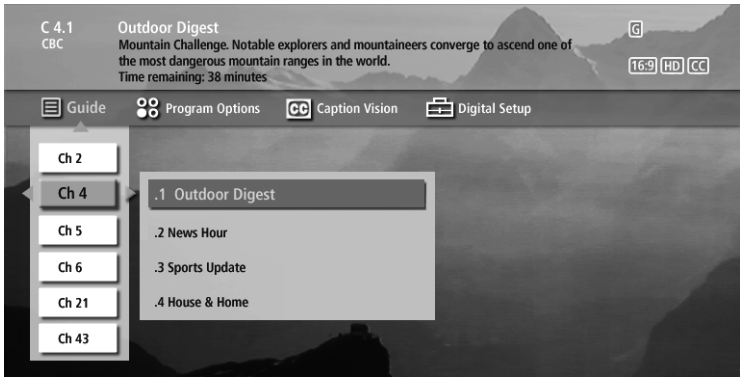

✍ Program information in the guide is provided by the broadcasters. As a result, it may sometimes include only the channel number, without a program title or description.

Navigating the Digital Program Menus

Four digital menus are available on the digital program guide.

Digital Program Menu	See Page
Using the Guide Menu	61
Using the Program Options Menu	61
Using the Caption Vision Menu	62
Using the Digital Setup Menu	62

To navigate to these menus and through the available options:

1. Press ↑ ↓ ← → to navigate through the options.
2. Press ⊕ to select the desired option.

Using the Guide Menu

The Guide menu allows you to select digital channels and subchannels from a dropdown list. This list also provides information about the current program being shown on each digital channel.

✍ Subchannels are additional channels of programming broadcast simultaneously. For example, channel 4 might include three subchannels (4.1, 4.2, 4.3) that are showing programs at the same time.

Using the Program Options Menu

The Program Options menu allows you to customize the settings of the program on the currently tuned channel.

Option	Description
Alternate Video	Each program has a main video stream, and may have alternate video streams. This option allows you to switch among these alternate video streams.
Alternate Audio	Each program has a main audio stream (the audio that you hear when the channel is first tuned). This option allows you to switch among these alternate audio streams (e.g., for different languages).

Using the Caption Vision Menu

The Caption Vision menu allows you to turn on/off digital closed captioning, and to modify how digital closed captioning is shown on your LCD projection TV. Depending on the program, digital closed captioning will be available in a number of different languages, aspect ratios, and reading levels.

1 Press ↑ or ↓ to select from the following six services. The service description, if available, applies to the currently tuned channel.

Option	Description
Off	Turns off closed captioning for digital programs
1 XXX YYY ZZZ	XXX = language (English, Spanish, French, etc.) YYY = reader level (standard*, easy) ZZZ = aspect ratio (4:3, 16:9) * When set to this option, the option name is not shown
2 XXX YYY ZZZ	
3 XXX YYY ZZZ	
4 XXX YYY ZZZ	
5 XXX YYY ZZZ	
6 XXX YYY ZZZ	

✍ The Caption Vision menu only affects digital channels. For closed captioning on analog channels, see “Using the Setup Menu” on page 102.

Using the Digital Setup Menu

This option is the same as the “Digital Channels” option. See “Using the Channel Menu” on page 96.

The Digital Setup menu lets you change the way your digital channels are displayed.

The following digital setup functions are available:

Option	Description
Add Digital Channels	This option allows you to add new digital channels for the currently active antenna mode (Cable or VHF/UHF). This option is useful if the number of digital channels that your LCD projection TV is able to receive has recently been increased, but you do not want your LCD projection TV to perform a full Auto Setup.
Channel Show/Hide	This option allows you to remove (hide) digital channels from the Digital Program Guide’s list of channels and subchannels, as well as from channel surfing using CHANNEL +/–. Hidden channels can still be directly tuned using 0-9 and ·.
Digital Signal Strength	Displays the current strength of the digital signal on VHF/UHF, to allow you to adjust your antenna for optimal reception. (Does not apply to digital cable channels.)
Digital Caption Setup	Allows you to customize digital closed captioning (see page 63 for details).

Customizing Caption Vision

You can use the Digital Caption Setup menu to customize your LCD projection TV's Caption Vision.

Select from the following options to change the visual characteristics of your LCD projection TV's digital closed captioning. A preview window displays a sample as you scroll through each option.

Option	Description
Character Size	Small, Standard*, Large
Character Style	Style 1-7 (Style 4*)
Character Color	None, Color 1-8 (White*)
Edge Type	None*, Raised, Depressed, Outline, Left Shadow, Right Shadow
Edge Color	Color 1-8 (Black*)
Background Color	None, Color 1-8 (Teal, Transparent*)
Window Color	None*, Color 1-8

* Indicates factory default setting

Using the Memory Stick Viewer

About Memory Stick

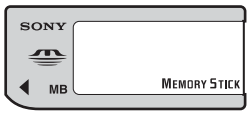

Memory Stick (sold separately) is a new, compact, portable, and versatile Integrated Circuit recording medium with a data capacity that exceeds that of a floppy disk. Memory Stick is specially designed for sharing digital data among Memory Stick compatible products such as digital cameras and digital video cameras. Because it is removable, Memory Stick can also be used for external data storage.

The Memory Stick Viewer on your LCD projection TV allows you to view files that are stored on Memory Stick media. You can view:

- Digital photos (JPEG files)
- Movies (MPEG1 files)

You can also play slide show background music using MP3 files stored on your Memory Stick.

For more information about handling Memory Stick media, see “Notes on Using Memory Stick Media” on page 78.

Features

With the Memory Stick Viewer, you can:

- View photo (JPEG) and movie (MPEG1) files in a thumbnail index or Slide Show
- Set customized Slide Show options, including transitions and background audio
- Pan, zoom, and rotate photos
- Lock (protect) or delete files on the Memory Stick

Memory Stick Compatibility

This television is compatible with the following Memory Stick media types:

- Memory Stick Media
- Memory Stick Duo Media
- Memory Stick Media with Memory Select Function
- Memory Stick PRO Media

About Memory Stick PRO Media

Memory Stick PRO media features vary by and are dependent upon the design of host hardware devices. Memory Stick Pro in this LCD projection TV has been tested to support up to 1 GB media capacity and does not support high-speed transfer, MagicGate copyright protection technology, or access control security features.

File Compatibility

The Memory Stick Viewer is compatible with JPEG images taken with Sony digital still cameras and MPEG1* movies taken with Sony digital cameras and camcorders. In order to be viewable in the Memory Stick Viewer, the files must have the following file name extensions:

File Type	Supported File Name Extensions
JPEG	.jpg .jpeg
MPEG1	.mpg .mpeg

Trademark Information

Memory Stick, Memory Stick PRO, and MagicGate are trademarks of Sony Corporation.

* Some variations of MPEG1 movies may not play back correctly.

Inserting and Removing a Memory Stick

If you are using a Memory Stick Duo, see “Inserting the Memory Stick Duo” on page 67.

Inserting a Memory Stick

1 Locate the Memory Stick slot and insert the Memory Stick into the Memory Stick slot as illustrated below. When inserted properly, it should slide in with little resistance and click into place.

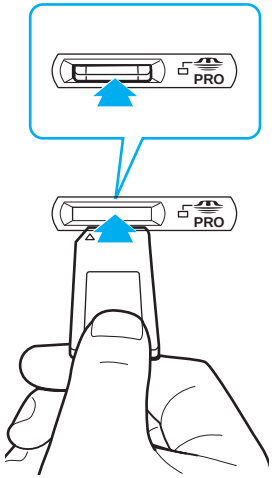

✍ Be sure to insert the Memory Stick in the correct direction. If the Memory Stick is forced in the wrong way, it may become damaged.

✍ Insert only Memory Stick media into the Memory Stick slot. Attempting to insert other objects into the slot may damage the LCD projection TV.

To remove the Memory Stick, see “Removing a Memory Stick” on page 68.

Inserting the Memory Stick Duo

Memory Stick Duo is a new, compact version of the standard-sized Memory Stick recording medium.

✍ CAUTION: Inserting the Memory Stick Duo incorrectly may result in permanent damage to the Memory Stick Duo and the LCD projection TV.

1 Before inserting a Memory Stick Duo into the LCD projection TV's Memory Stick slot, you must first insert the Memory Stick Duo into an adapter (sold separately).

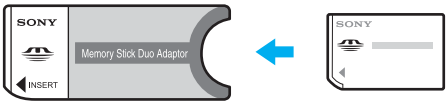

Memory Stick Duo Adapter **Memory Stick Duo**

✍ CAUTION: Inserting the Memory Stick Duo into the Memory Stick slot without the adapter may result in permanent damage to the Memory Stick Duo and the LCD projection TV.

2 Insert the Memory Stick Duo and adapter as shown below.

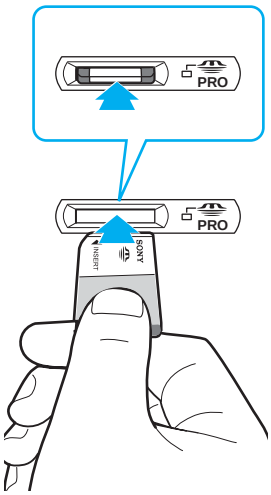

✍ CAUTION: Inserting the Memory Stick adapter backwards or upside down may result in permanent damage to the Memory Stick adapter and the LCD projection TV.

To remove the Memory Stick Duo, see "Removing a Memory Stick" on page 68.

Removing a Memory Stick

1 Check that the Memory Stick indicator is off. (When the light is on, this indicates that the LCD projection TV is reading data from the Memory Stick.)

✍ Removing the Memory Stick while a file is being accessed (when the Memory Stick indicator on the LCD projection TV's front panel is lit) may damage the Memory Stick or its contents.

2 Push the Memory Stick gently into the slot, and then release it. The Memory Stick media is ejected.

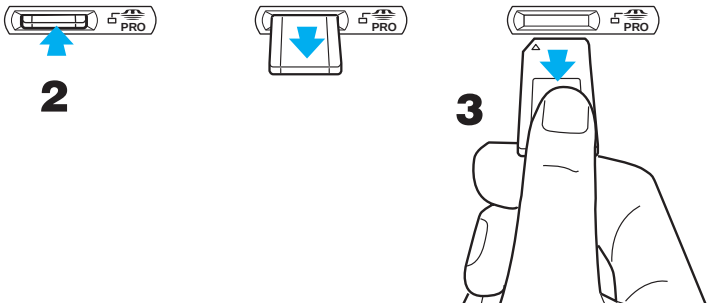

When removing the Memory Stick, do not attempt to just pull it from its slot. Follow steps 1-3 (right).

3 Pull the Memory Stick completely out of the slot.

✍ To protect small children from injury from Memory Stick Media, remove all Memory Stick media from the LCD projection TV's Memory Stick slot and store it in a safe location when it is not in use.

Using the Memory Stick Index

Turn on the LCD projection TV and insert a Memory Stick that contains the photo or movie files you want to view. For how to insert a Memory Stick, see page 66.

> ✍ If the Memory Stick Index does not appear, press the MEMORY STICK button on the remote control.

The Memory Stick Index appears, which displays thumbnail images of the files stored on the Memory Stick.

About the Lock and Movie Icons on the Thumbnail Images

	Indicates the thumbnail is a movie (MPEG1) file instead of a photo (JPEG) file.
	Indicates the thumbnail is locked. Locked files cannot be changed or deleted. For details, see “Protect“ on page 77.

Using the Memory Stick Index

The following describes how to use the Memory Stick Index.

To Do This ...	Do This ...
Move the highlight to a photo or movie ( ) thumbnail	Press ↑ ↓ ← →.
Display the highlighted photo or movie file full screen	Press . For details, see “Viewing Photos” on page 71 and “Playing Movies” on page 74.
Display the next page of thumbnails	**1** Press ↓ to select ▼. **2** Press ↓ to display the next page of thumbnails.
Display the previous or next page of thumbnails	**1** Press ↓ to select ▼. **2** Press ← to select ↕. **3** To go to the previous page, press ↑. To go to the next page, press ↓.
Use the Memory Stick menu bar to access additional options	**1** Press ↓ to select ▼. **2** Press ← or → to select Slide Show, Folder, or Memory Stick. **3** Press ↑ or ↓ to select the option you want to change. For details on these options, see “Memory Stick Index Menu Bar Options” on page 76.
Move the highlight from the Memory Stick menu bar back to the thumbnails	**1** Press ← or → to select ▼. **2** Press ↑ to return to the currently displayed thumbnails, or ↓ to display the next page of thumbnails.
Exit Memory Stick Viewer	Press MEMORY STICK on the remote control.

Viewing Photos

When you select a photo from the Memory Stick Index (described on page 69), it displays as shown below, with the following controls.

JPEGs captured using a digital video camera may appear to display motion in full screen. This is a result of the way digital video cameras record still images, and is not a result of a malfunction with the LCD projection TV.

Photo Controls

When the menu is hidden, press ← or → to go to the previous or next photo.

To Do This ...	Do This ...
Display the next or previous file on the Memory Stick	Press ↑ or ↓ to highlight the (Previous/Next) button. Then press ← to go to the previous file, or → to go to the next file.
Hide the Photo menu bar, displaying only the photo	With the highlight in the Photo menu bar, press ↓.
Display the hidden Photo menu bar	Press ↑.
Display the Memory Stick Index again	Press ← or → to highlight Index in the Photo menu bar and press . For details on the Memory Stick Index, see page 70.
Access additional options in the Photo menu bar	See “Photo Menu Bar Options” on page 72.
Exit Memory Stick Viewer	Press MEMORY STICK on the remote control.

Photo Menu Bar Options

The Photo menu bar lets you access additional photo viewing options.

To access the Photo menu bar

1 Press ← or → to select Slide Show, View, or File.

2 Use ↑ ↓ ← → to select the desired option.

Option		Description
Index		Displays the Memory Stick Index, with the highlight on the thumbnail of the currently displayed photo. For details, see “Using the Memory Stick Index” on page 69.
Slide Show		Displays the Slide Show menu. For details, see “Slide Show Menu Options” on page 76.
View	Zoom/Pan	Allows you to magnify and pan across the photo. For details, see “Using Zoom and Pan” on page 73.
	Rotate	Allows you to rotate the photo in 90 degree increments clockwise or counterclockwise. For details, see “Using Rotate” on page 73.
File	Information	Allows you to turn on or off the display of file information. Select On or Off.
	Protect	Allows you to protect the JPEG file from any changes. When a JPEG file is protected, it cannot be rotated or deleted. Select On or Off.
	Delete	Deletes the JPEG file from the Memory Stick.You cannot delete a JPEG file that has been protected (or if the Memory Stick is locked).

JPEG files that are protected are indicated by the Lock icon.

Using Zoom and Pan

To Zoom and Pan a photo

1. In the Photo menu bar, press ← or → to highlight View.
2. Press ↑ or ↓ to highlight Zoom/Pan and press ⊕.
3. Specify the zoom center point by using ↑ ↓ ← →; then press ⊕ to set the center.

   The Zoom and Pan controls are displayed.

To Do This ...	Do This ...
Zoom in (increase magnification) or out (decrease magnification)	Press ← or → to highlight Zoom and press ⊕. Then press ↑ to zoom in or ↓ to zoom out. To stop using Zoom, press ⊕.
Pan (left, right, up, down)	(You can use Pan only when the photo is magnified using Zoom.) Press ← or → to highlight Pan and press ⊕. Then press ← → ↑ ↓ to pan around the photo. To stop using Pan, press ⊕.
Exit the Zoom/Pan controls	Press ← or → to highlight Exit and press ⊕.
Exit Memory Stick Viewer	Press MEMORY STICK on the remote control.

Using Rotate

To Rotate a photo

1. In the Photo menu bar, press ← or → to highlight View.
2. Press ↑ or ↓ to highlight Rotate.
3. To rotate clockwise, press ↑ or ↓ to highlight Clockwise and press ⊕.

   To rotate counterclockwise, press ↑ or ↓ to highlight Counterclockwise and press ⊕.

The photo is rotated 90 degrees each time you press ⊕.

Playing Movies

When you select a movie from the Memory Stick Index (described on page 69), it displays as shown below, with the following controls.

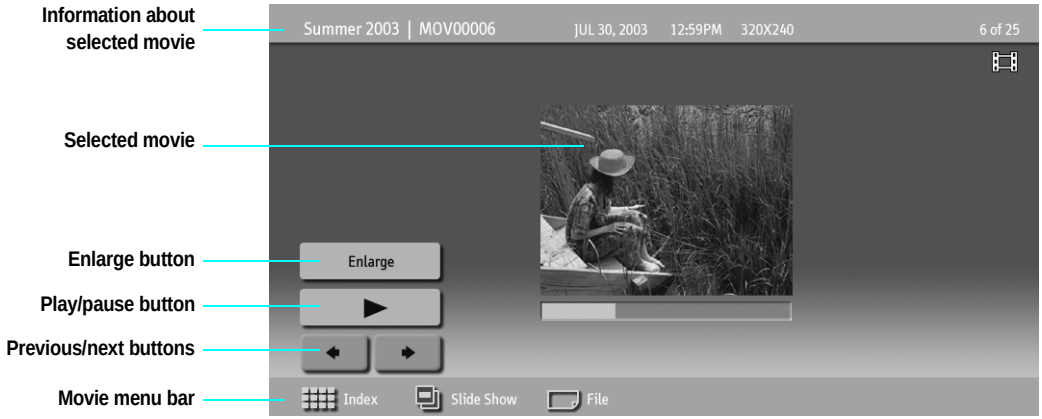

Movie Controls

The quality of the movie when enlarged depends on the resolution of the MPEG1 file. See your camera's instruction manual for details.

To Do This ...	Do This ...
Enlarge the movie window	Press ↑ or ↓ to highlight Enlarge, and then press ⊕. To display the movie controls again, press ⊕. When the movie playback ends, the movie controls are displayed again.
Play the movie with the movie controls displayed	Press ↑ or ↓ to highlight ▶ (Play) and then press ⊕.
Pause the movie	While the movie is playing, the ▶ button changes ❚❚ (pause) button. Press ↑ or ↓ to highlight ❚❚ (Pause) and then press ⊕.
Display the previous or next file on the Memory Stick	Press ↑ or ↓ to highlight the ◀ ▶ (Previous/ Next) button. Then press ← to go to the previous file, or → to go to the next file.
Hide the Movie menu bar, displaying only the movie	With the highlight in the Movie menu bar, press ↓.
Display the hidden Movie menu bar	Press ↑.
Access additional options in the Movie menu bar	See "Movie Menu Bar Options" on page 75.
Exit Memory Stick Viewer	Press MEMORY STICK on the remote control.

Movie Menu Bar Options

To access the Movie menu bar

1. Use ↑ or ↓ to highlight Index in the Movie menu bar.
2. Press ← or → to select Index, Slide Show, or File.
3. Press ↑ or ↓ to select the desired option.

Option	Description	
Index	Displays the Memory Stick Index, with the highlight on the thumbnail of the currently displayed movie.	
Slide Show	Displays the Slide Show menu. For details, see “Slide Show Menu Options” on page 76.	
File	Information	Determines whether file information is displayed. Select On or Off.
	Protect	Allows you to protect the MPEG1 file from any changes. When an MPEG1 file is protected, it cannot be deleted. Select On or Off.
	Delete	Deletes the MPEG1 file from the Memory Stick.You cannot delete an MPEG1 file that has been protected (or if the Memory Stick is locked).

MPEG1 files that are protected are indicated by the Lock icon.

Memory Stick Index Menu Bar Options

Slide Show Menu Options

The Slide Show menu is the same whether you select it from the Memory Stick Index (page 69), Photo (page 71), or Movie (page 74) menus.

When you select Complete List, it may take a moment to display the list of all MP3 files.

Some JPEG files may take longer to display than others, which may make it seem longer than the interval you selected for Slide

The Slide Show menu includes the following options:

Option	Description	
Start	Starts the Slide Show.	
Music	Allows you to select background audio to play during the Slide Show.	
	Off	No additional background audio is played during the Slide Show. Audio that is associated with the JPEG or MPEG1 files will play.
	Play All	Plays all MP3 files on the Memory Stick. The Piano MP3 file is not played.
	Piano	Plays the MP3 file stored in the LCD projection TV's internal memory. (This file is indicated by a different color than the MP3 files on the Memory Stick.)
	(List of MP3 Files)	Displays a list of all MP3 files found at the top level (root) of the Memory Stick. To show additional MP3 files stored in other folders on the Memory Stick, select Complete List.
	Complete List	Displays a list of all available MP3 files. The list is sorted in alphabetical order, grouped by folder.
Transition Effect	Allows you to select an effect to be used when advancing to the next file in the Slide Show.	
	Off	Uses a quick change, or cut.
	Fade	Uses a cross fade.
	Wipe ➡ Wipe ⬅ Wipe ⬆ Wipe ⬇	Uses a linear sweep that moves across the screen, revealing the next image while covering the previous image.
	Random	Randomly cycles through all Transition Effects.
Slide Duration	Allows you to specify a timed slide advance after a selected time interval. Select from 3 sec, 5 sec, 10 sec, 30 sec, 1 min, 5 min.	
Repeat	On	Slide Show continuously loops.
	Off	Slide Show plays once through all files and ends.

Folder Menu Options

The Folder menu includes the following options:

Option	Description	
Select Contents	Allows you to select different folders to view in the Memory Stick Viewer.	
	Digital Camera Folders	Selects all folders within the directories defined by the DCF rules used by Sony digital cameras (see page 78). JPEG and MPEG1 files in those directories are recognized even if they do not conform to the DCF file naming rules.
	Select a Folder	Allows you to access individual folders on the Memory Stick.
Protect	Allows you to protect files from any changes. When a file is protected, it cannot be rotated or deleted. The Protect options affect files currently shown in the Memory Stick Index.	
	Protect All	Protects all files.
	Protect None	Unprotects all files.
File Order	Allows you to change the order in which the Memory Stick files are displayed.	
	Date Order	Displays files in chronological order by modification date.
	Date Order Reverse	Displays files in reverse chronological order by modification date.
	Alphabetical	Displays files in alphabetical order by filename.
Filter	Allows you to selectively display specific file types within the selected folder.	
	Show All	Displays all readable files.
	Show Photos Only	Displays only photo (JPEG) files.
	Show Movies Only	Displays only movie (MPEG1) files.

Files that are protected are indicated by the Lock icon.

The Rotate and Protect functions do not change the file's modification date.

Memory Stick Menu

The Memory Stick menu displays the current status of the Memory Stick, including total capacity, used capacity, and free capacity.

Notes on Using Memory Stick Media

About DCF File Names

Most Sony brand digital still and video cameras automatically record still photo and movie files using DCF compliant directory and file names.

If you selected the Digital Camera Folders option, as described on page 77, you might want to have your digital camera's instruction manual handy in order to check how files and directories are organized for your specific model of digital camera.

DCF stands for "Design Rules for Camera File Systems," which are specifications established by the Japan Electronics and Information Technology Industries Association (JEITA: former JEIDA).

Memory Stick Precautions

When using Memory Stick media, follow these precautions:

- To avoid permanent damage to still image data, do not turn off the LCD projection TV or remove Memory Stick media from the insertion slot while data is being read (as indicated by the Memory Stick indicator light being on).
- Avoid touching the terminal of Memory Stick media or bringing it into contact with a metal object.
- Do not drop, bend, or submit Memory Stick media to external shock.
- Do not disassemble or modify Memory Stick media.
- Avoid getting liquid on Memory Stick media.
- Apply labels only within the designated label area.

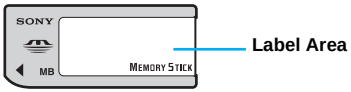

- To avoid permanent damage to still image data, do not use or store Memory Stick media in a location subject to:
  - High temperature (such as near a heater or inside a hot car)
  - High humidity
  - Direct sunlight
  - Corrosive substances
  - Magnetic fields
  - Excessive dust
  - Static electricity or electric noise
  - Electric surges
- Store and carry Memory Stick media in its original case to ensure protection of stored data.
- Save a backup of stored data.

Using i.LINK

About i.LINK

This LCD projection TV is equipped with i.LINK, which provides a secure digital interface to other digital home entertainment devices, such as digital VCRs, digital camcorders, set-top boxes, and other devices that also are equipped with i.LINK. i.LINK allows for the secure transfer of copyright-protected digital content between these devices and your digital television.

i.LINK is a trademark of Sony Corporation and used only to designate that a product contains an IEEE 1394 connector.

All products with an i.LINK connector may not communicate with each other.

Using i.LINK Cables

This LCD projection TV has three S400 i.LINK terminals (one in the front panel, and two in the back panel). You can use the following i.LINK cables with this LCD projection TV:

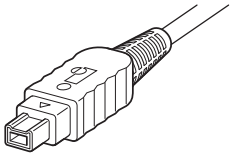

4-pin i.LINK cable

Sony Model	Length
VMC-IL4415	1.5 meters
VMC-IL4435	3.5 meters

✍ Do not use cables other than the ones listed above.

Connecting i.LINK Devices

✍ Before connecting this unit to i.LINK-compatible equipment, read the instruction manual of the i.LINK device to be connected.

To connect a digital i.LINK device (using only a digital signal)

1 Using an i.LINK cable (see page 80), connect the device's i.LINK jack to either of the LCD projection TV's i.LINK jacks.

To connect an i.LINK device that supports an EIA-775A connection

1 Using an i.LINK cable (see page 80), connect the device's i.LINK jack to either of the LCD projection TV's i.LINK jacks.

2 Using an A/V cable, connect the i.LINK device's A/V output jacks to the LCD projection TV's VIDEO 3 A/V input jacks.

✍ Only one i.LINK cable should connect the LCD projection TV and any given i.LINK device.

Rear of the LCD projection TV

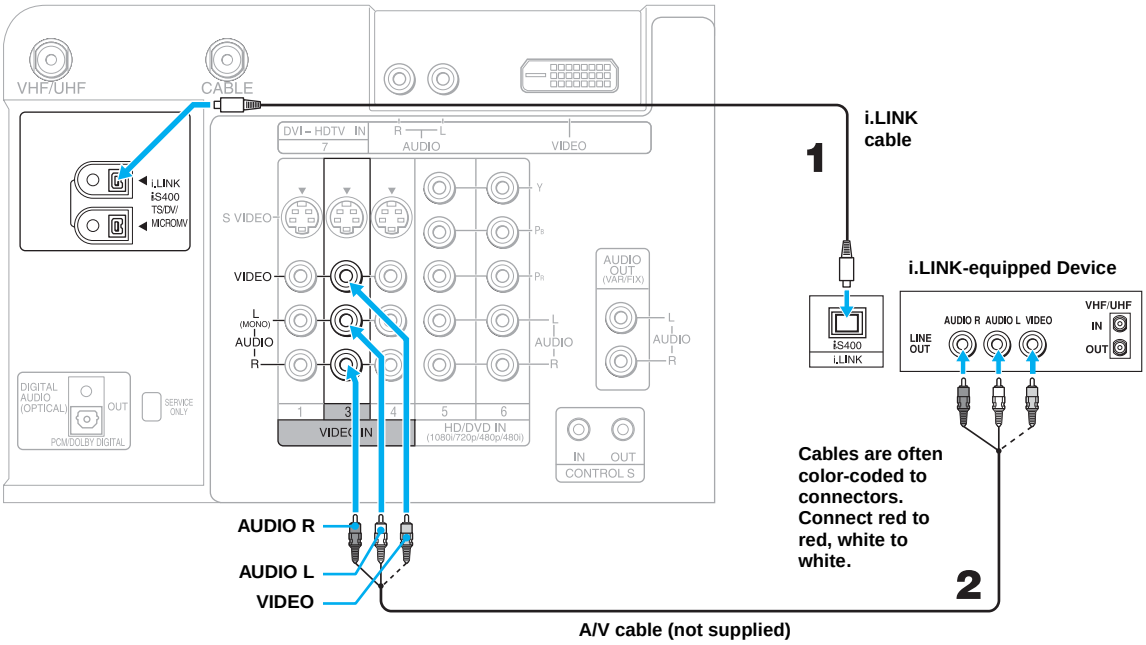

(Continued)

Notes on Using This Connection

To Do This ...	Do This ...
Set up a digital i.LINK device	For digital i.LINK devices (devices that require only the i.LINK connection), no setup is necessary. The LCD projection TV automatically recognizes the device as soon as the connection is made.
Set up an i.LINK device that supports an EIA-775A analog connection	❑ Connect analog A / V cables to the VIDEO 3 input (see page 81). ❑ Use the i.LINK Control Panel to activate the analog connection to your i.LINK device (see page 86).

Notes on Connecting i.LINK Devices

To connect two or more i.LINK devices, use i.LINK cables to connect them as shown below.

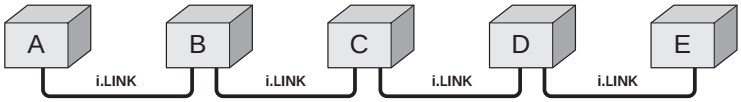

You can connect up to 63 i.LINK devices. However, the maximum number of cables in any serial route is 16.

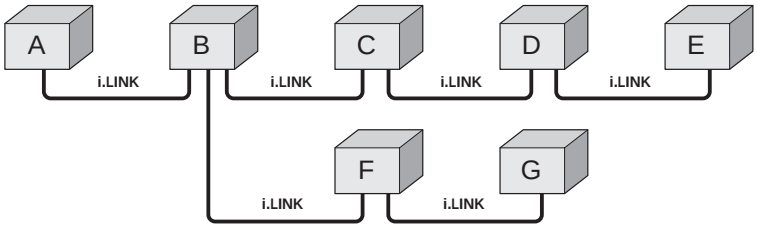

Do not connect i.LINK devices in a way that creates a loop.

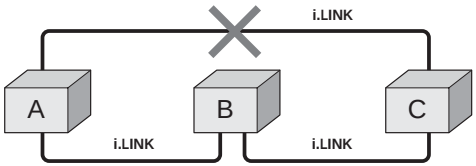

Connecting non-compatible devices, such as PCs or PC peripherals, may result in malfunctions.

Selecting an i.LINK Device

Before an i.LINK device can be viewed, it must first be selected via the i.LINK Device List.

1 Connect the i.LINK device that you wish to operate.

✍ For instructions on connecting i.LINK devices, see page 81.

2 Press i.LINK on the remote control.

i.LINK functions are not available while using the following TV features: Twin View, Freeze, and Memory Stick.

The LCD projection TV (DTV), along with all devices connected by i.LINK to the LCD projection TV, appear on the i.LINK Device List.

Devices that are not supported by the LCD projection TV appear on the Device List as “Other Device,” but cannot be controlled using the LCD projection TV's remote control or on-screen i.LINK Control Panel. For these devices, use the remote control supplied with the device.

3 Press ↑ or ↓ to navigate among the i.LINK-connected devices.

✍ i.LINK devices can be connected to one another and to the LCD projection TV while the LCD projection TV is powered on. The Device List will automatically update to include the newly-connected device. See page 81 for more information on connecting i.LINK devices.

4 Press ⊕ to select the desired device and display the device's i.LINK Control Panel. Use the i.LINK Control Panel to operate the selected device. For details, see page 84.

Using the i.LINK Control Panel

After you select an i.LINK device using the Device List, the LCD projection TV displays the i.LINK Control Panel, which allows you to use the LCD projection TV's remote to control the selected i.LINK device.

1 If the i.LINK Control Panel is not already displayed, press i.LINK on the remote control.

✍ If i.LINK is pressed while the LCD projection TV is displaying an analog or digital channel (not the i.LINK device), then the Device List will appear. Select the desired device from the list and press ⊕ to display the Control Panel.

2 Press ↑ ↓ ← → on the remote control to navigate through the options available in the i.LINK Control Panel.

3 Press ⊕ to select a desired option.

4 Press EXIT to exit the Control Panel and view the i.LINK device full-screen.

✍ To exit i.LINK mode, select DTV from the Device List or press CH+/–.

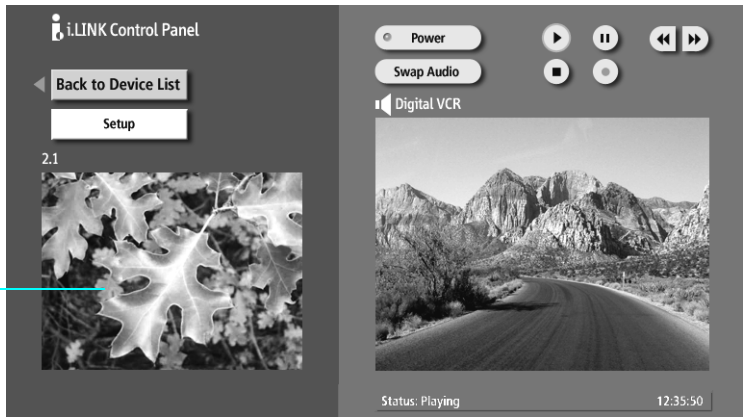

The DTV window appears only if the i.LINK menus were entered while watching a digital TV channel

The i.LINK Control Panel displays the signal from the LCD projection TV to the left (if available), and the signal from the currently selected device to the right.

To Do This ...	Do This ...
Go to the Device List	Press ↑ ↓ ← → to highlight Back to Device List and press ⊕.
Change the audio being played from the LCD projection TV to the current selected device, and vice versa	Press ↑ ↓ ← → to highlight Swap Audio and press ⊕. An icon appears next to the window that currently has sound.
Play a recording from the selected i.LINK camcorder or digital VCR	Press ↑ ↓ ← → to highlight ▶ and press ⊕.
Fast-forward or rewind a recording from the selected i.LINK camcorder or digital VCR	Press ↑ ↓ ← → to highlight ▶▶ or ◀◀ and press ⊕.
Record from LCD projection TV to the selected i.LINK digital VCR	If the ● (record) button is available, press ↑ ↓ ← → to highlight ● and press ⊕.
Stop a recording from the selected i.LINK digital VCR	Press ↑ ↓ ← → to highlight ■ and press ⊕.
Turn the selected device power on and off	Press ↑ ↓ ← → to highlight Power and press ⊕.
Setup the selected device	Press ↑ ↓ ← → to highlight Setup and press ⊕. For more details on Setup, see page 86.

Notes About Controlling i.LINK Devices

- You can control the functions of the selected i.LINK device by using the equivalent buttons on the LCD projection TV's remote control. To program the remote control to operate i.LINK devices, see “Programming the Remote Control” on page 48.
- Some options on the i.LINK Control Panel may not be available, depending on the device being controlled.
- Only i.LINK-equipped digital camcorders and digital VCRs can be controlled directly through the i.LINK Control Panel.
- Not all functions are supported for all i.LINK devices.

i.LINK Setup

You can use the i.LINK Control Panel to access digital setup options, some of which are also available through the Digital Program Guide (described on page 62).

To Do This ...	Do This ...
Set up the selected device	Press ↑ ↓ ← → to highlight Setup and press ⊕.
Set up Caption Vision	Once i.LINK Setup has been selected, Press → then ↑ or ↓ to Caption Vision, and press ⊕. ✍ For details about setting up Caption Vision , see “Customizing Caption Vision” on page 63.
Set up i.LINK Analog Video (Set-Top Box)	The LCD projection TV is able to accept an analog signal from a selected set-top box. The set-top box must be EIA-775A compliant and must be connected to the LCD projection TV’s VIDEO 3 input. To associate the device with the LCD projection TV's analog VIDEO 3 input, press ↑ or ↓ to select to Analog Video and press ⊕. All EIA-775A-compliant devices will be shown in the list. Select the desired device from the list and press ⊕.

Notes on i.LINK

- The LCD projection TV can act as an i.LINK repeater, so that i.LINK signals are be relayed to another device even when the LCD projection TV is powered off. To enable this feature, set the i.LINK Standby option to On using the Setup Menu as described on page 105.
- Parental Control settings apply to the signal from a selected device. For more details, see page 98.

Using the Menus

Overview

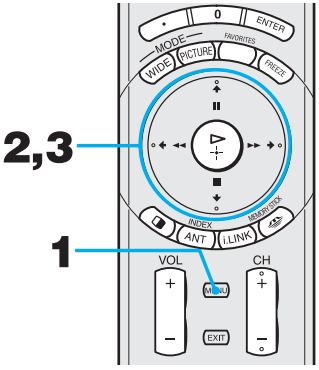

Opening and choosing a menu

1. Press MENU to display the menu screen.
2. Press ← or → to highlight the desired menu icon and press ⊕ to select it.
3. Use the arrow button to scroll through the features.
4. See the specific menu page for instructions on moving through the menu.

To end a menu session

❑ Press MENU again.

To end one menu session and move to another

❑ Press ↑ to return to the menu icons.
Press ← or → to choose the next menu icon and press ⊕ to select it.

The menu gives you access to the following features:

Menu Icon	Description	Page
Video	Allows you to make adjustments to your picture settings. It also allows you to customize the Picture Mode based on the type of program you are viewing.	88
Audio	Offers enhanced audio options such as listening to second audio programming (SAP), or customizing the Effect of the sound on your LCD projection TV.	92
Screen	Allows you to set the wide screen mode, adjust the vertical center and vertical size in wide mode, and set the 4:3 Default mode.	94
Channel	Allows you to set up a Favorite Channel list, run the Auto Program function, and more.	96
Parent	Lets you control the viewing of programs based on their ratings.	98
Setup	Provides several options for setting up your channels, labeling your Video inputs, selecting the language of the on-screen menus and more.	102

Using the Video Menu

To select the Video Menu

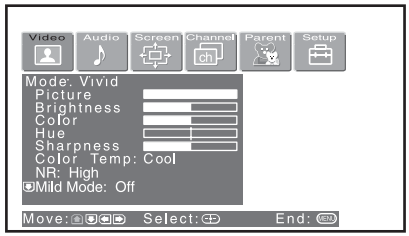

1 Press MENU.

2 Press ← or → to highlight the Video icon and press .

3 Use the arrow button to scroll through the features.

4 Press to select a feature. That feature's adjustment appears.

5 Use the arrow button to make the desired adjustments.

6 Press to select/set.

7 Press MENU to exit the menu screen.

To restore the factory default settings for the Video settings:

❑ Press RESET on the remote control when in the Video menu.

Selecting Video Options

To quickly and easily change from one Picture Mode to another, use PICTURE on the remote control.

The Video menu includes the following options.

Option	Description	
Mode	Vivid	Select for enhanced picture contrast and sharpness.
Customized picture viewing	Standard	Select for standard picture settings. Recommended for home entertainment.
	Pro	Select to display a picture with minimum enhancements.
	✍ You can alter the Video menu settings (Picture, Brightness, Color, etc.) for each Mode. ✍ You may set up a "Picture Mode" (Vivid, Standard, Pro) independently for each Video input (Video 1-Video 7, including the Antenna input). Your "Picture Mode" settings will automatically be saved after each selection. This will enable you to customize the Picture Mode setting for each type of signal source. Typically, Vivid should be used for higher quality input signal sources, and Pro for lower quality signals.	
Picture	Adjust to increase picture contrast and deepen the color or decrease picture contrast and soften the color.	
Brightness	Adjust to brighten or darken the picture.	
Color	Adjust to increase or decrease color intensity.	
Hue	Adjust to increase or decrease the green tones.	

Option	Description		
Sharpness	Adjust to sharpen or soften the picture.		
Color Temp. *White intensity adjustment*	Choose from three color temperatures:		
	Cool	Select to give the white colors a blue tint.	
	Neutral	Select to give the white colors a neutral tint.	
	Warm	Select to give the white colors a red tint.	
NR *Noise Reduction*	Select to reduce the noise level of connected equipment. It is also effective on the signal from the VHF/UHF jack. Select from High, Medium, Low, Off.		
Mild Mode	On	Select for a natural, soft picture.	
	Off	Select to turn off Mild Mode.	
Advanced Video	Select Program to choose among the options described below.		
	DRC Mode	Creates a high-resolution picture with 4 × density, for high quality sources (i.e., DVD player, satellite receiver).	
		High Dens.	Recommended for moving pictures.
		Progressive	Recommended for still images and text.
		CineMotion	Provides an optimized display by automatically detecting film content and applying a reverse 3-2 pulldown process. Moving pictures will appear clearer and more natural-looking.

DRC Mode and DRC Palette are not available when watching 480p, 720p, and 1080i sources.

(Continued)

DRC Palette is not available when Mild Mode is set to On.

BN Smoother may not be effective according to the input equipment.

Clear White, Detail Enhancer, Color Corrector, Black Corrector, Gamma Corrector, White Balance and Cinema Black options are available only when Pro mode is selected.

Option	Description
DRC Palette	Allows you to customize the level of detail (Reality) and smoothness (Clarity) for up to three input sources. For example, you can create one Custom setting to optimize your cable input's picture, and create another to optimize your DVD player's picture. You can switch among the three Custom settings. 1 Press the arrow button to highlight Custom 1, Custom 2, or Custom 3 and then press ⊕. The DRC palette appears. Custom 1 [25] Reality Clarity [1] 2 Press the arrow button to adjust the position of the marker (●). As you move the ● higher along the Reality axis, the picture becomes more detailed. As you move the ● to the right along the Clarity axis, the picture becomes smoother. 3 To save the setting, press ⊕. To return the Custom options to the default factory settings, press the RESET button.
BN Smoother	Select to reduce block noise caused by digital video encoding and decoding process. It is especially effective for watching a DVD or digital TV picture. Select from High, Medium, Low and Off. ✍ An image may not be corrected due to the connected equipment.
Clear White	Select to emphasize the white colors. Select On or Off.
Detail Enhancer	Select to sharpen picture definition. Select from High, Medium, Low and Off.
Color Corrector	Select to emphasize the red and blue colors. Select On or Off.
Black Corrector	Select to enhance the black colors to give the picture strong contrast. Select from High, Medium, Low and Off.
Gamma Corrector	Select to adjust the balance between bright and dark areas of the picture. Select from High, Medium, Low and Off.

Option	Description	
	White Balance	Select to fine-adjust the white color intensity by changing the red, green and blue levels. You can adjust these levels by selecting R-Gain, G-Gain, B-Gain, R-Bias, G-Bias or B-Bias. To restore the factory default setting of White Balance, select Initial Set.
	Cinema Black	Select to enhance the black level. Select On or Off.

Using the Audio Menu

To select the Audio Menu

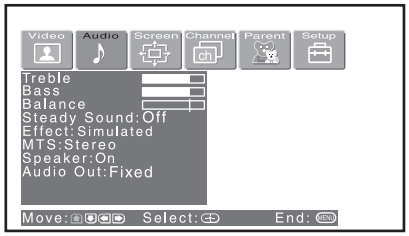

1 Press MENU.

2 Press ← or → to highlight the Audio icon and press ⊕.

3 Use the arrow button to scroll through the options.

4 Press ⊕ to select an option. That option's settings appear.

5 Use the arrow button to scroll through the settings.

6 Press ⊕ to select the desired setting.

7 Press MENU to exit the menu screen.

To restore the factory default settings for Treble, Bass and Balance

❑ Press RESET on the remote control when in the Audio menu.

Selecting Audio Options

The Audio menu includes the following options:

Option	Description	
Treble	Adjust to increase or decrease higher-pitched sounds.	
Bass	Adjust to increase or decrease lower-pitched sounds.	
Balance	Adjust to emphasize left or right speaker balance.	
Steady Sound	Auto	Select to stabilize the volume.
	Off	Select to turn off Steady Sound.
Effect	Virtual Dolby	Select for Virtual Dolby surround sound (for stereo programs only).
	TruSurround	Select for surround sound (for stereo programs only).
	Simulated	Adds a surround-like effect to mono programs.
	Off	Normal stereo or mono reception.

Virtual Dolby and TruSurround attempt to create the same surround effect produced by a multichannel system using the left and right speakers. Virtual Dolby is most effective for programs encoded in Dolby Surround.

Option	Description	
MTS *Enjoy stereo, bilingual and mono programs*	Stereo	Select for stereo reception when viewing a program broadcast in stereo.
	Auto SAP	Select to automatically switch the LCD projection TV to second audio programs when a signal is received. (If no SAP signal is present, the LCD projection TV remains in Stereo mode.)
	Mono	Select for mono reception. (Use to reduce noise during weak stereo broadcasts.)
Speaker	On	Select to turn on the LCD projection TV speakers.
	Off	Select to turn off the LCD projection TV speakers and listen to the LCD projection TV's sound only through your external audio system speakers.
Audio Out *Easy control of volume adjustments*	Variable	This option can be set only when the Speaker option is set to Off. The LCD projection TV's speakers are turned off, but the audio output from your audio system can still be controlled by the LCD projection TV's remote control.
	Fixed	The LCD projection TV's speakers are turned off and the audio output of the LCD projection TV is fixed. Use your audio receiver's volume control to adjust the volume (and other setting) through your audio system.

Using the Screen Menu

To select the Screen menu

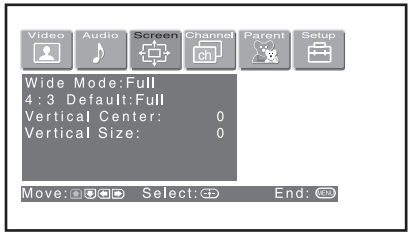

1 Press MENU.

2 Press ← or → to highlight the Screen icon and press ⊕.

3 Use the arrow button to scroll through the features.

4 Press ⊕ to select a feature. That feature's options appear.

5 Use the arrow button to scroll through the options.

6 Press ⊕ to select the desired option.

7 Press MENU to exit the menu screen.

Selecting Screen Options

The Screen menu includes the following options:

To change from one Wide Mode to another, use WIDE MODE on the remote control.

Wide Mode is unavailable while in Twin View (page 55) or Freeze (page 58) mode.

Wide Mode is unavailable when you are watching 720p and 1080i sources, and when viewing photos from your memory stick media.

Option	Description	
Wide Mode *Select a Screen Mode to use for 4:3 sources.*	Wide Zoom	Select to enlarge the 4:3 picture, to fill the 16:9 screen, keeping the original image as much as possible.
	Normal	Select to return the 4:3 picture to normal mode.
	Full	Select to enlarge the 4:3 picture horizontally only, to fill the wide screen.
	Zoom	Select to enlarge the 4:3 picture horizontally and vertically to an equal aspect ratio that fills the wide screen.

The 4:3 Default functions only when the LCD projection TV receives 480i and 480p signals.

If 4:3 Default is set to anything but Off, the Wide Mode setting changes only for the current channel. When you change channels (or inputs), Wide Mode is automatically replaced with the 4:3 Default setting. To retain the current Wide Mode setting as channels and inputs are changed, set 4:3 Default to Off.

Option	Description	
4:3 Default *Select the default Screen Mode to use for 4:3 sources.*	Wide Zoom	Select to enlarge the 4:3 picture, to fill the 16:9 screen, keeping the original image as much as possible.
	Normal	Select to return the 4:3 picture to normal mode.
	Full	Select to enlarge the 4:3 picture horizontally only, to fill the wide screen.
	Zoom	Select to enlarge the 4:3 picture horizontally and vertically to an equal aspect ratio that fills the wide screen.
	Off	Select to continue using the current Screen Mode setting when the channel or input is changed.
Vertical Center	Adjust	Allows you to move the position of the picture up and down in the window. (Available only in Wide Zoom and Zoom modes.) Press ↑ or ↓ and press ⊕ to choose a position between +25 and –25 (ZOOM mode), and +10 and –10 (Wide Zoom mode).
Vertical Size	Adjust	Allows you to adjust the vertical size of the picture. (Available only in Wide Zoom and Zoom modes.) Press ↑ or ↓ and press ⊕ to choose a correction between +7 and –7.

Using the Channel Menu

To select the Channel Menu

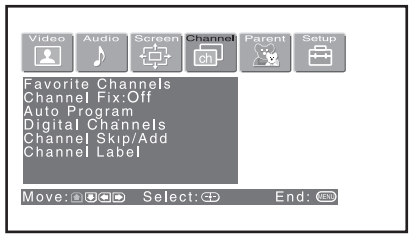

1 Press MENU.

2 Press ← or → to highlight the Channel icon and press ⊕.

3 Use the arrow button to scroll through the features.

4 Press ⊕ to select a feature. That feature's options appear.

5 Use the arrow button to scroll through the options.

6 Press ⊕ to select the desired option.

7 Press MENU to exit the menu screen.

Selecting Channel Options

The Channel menu includes the following options:

Option	Description	
Favorite Channels	Let you set up a list of your favorite channels. For details, see "Using Favorite Channels" on page 54.	
Channel Fix	Off	Turns off Channel Fix.
Useful when you have a cable box or satellite receiver connected	2-6	"Fix" your LCD projection TV's channel setting to 2-6 and use the cable box, VCR or satellite receiver to change channels. Select one of these settings if you have connected the device to the VHF/UHF jack.
	C 2-6	Same as 2-6, except you select one of these settings if you have connected the device to the CABLE jack (see page 23).
	Video 1	Use when connecting a cable box. TV output should be connected through the cable box.
Auto Program	Automatically programs the LCD projection TV for all receivable channels.	
Digital Channels	Add	Select to add digital channels.

Channels that you set to be skipped can be accessed only with the 0-9 buttons.

Option	Description
Channel Skip/Add	Allows you to customize the channel list that appears when you use the CH+/– buttons. 1 Press ↑ or ↓ to scroll through the channels until you find the channel you want to skip or add. Then press ⊕ to select it. 2 Press ↑ or ↓ to toggle between Add or Skip. Then press ⊕ to select. 3 To add or skip more channels, repeat steps 1 and 2. 4 Press ← to return to the Channel Menu, or press MENU to exit the Menus.
Channel Label	Allows you to assign labels (such as station call letters) to channel numbers. You can label up to 40 channels. 1 Press ↑ ↓ ← → to highlight Channel and press ⊕. 2 Press ↑ or ↓ to scroll through the channel numbers (1-125). Then press ⊕ to select the channel number that you want to assign a label. 3 Press ↑ ↓ ← → to highlight Label and press ⊕. 4 Press ↑ or ↓ to scroll through the label characters (A-Z, 0-9, etc.). Then press ⊕ to select the highlighted character. 5 Repeat to add up to 5 characters to the label. 6 To assign labels to more channels, repeat steps 1-4. 7 Press ← to return to the Channel Menu, or press MENU to exit the Menus.

Using the Parent Menu

The Parent Menu allows you to set up the TV to block programs according to their content and rating levels.

To select the Parent Menu

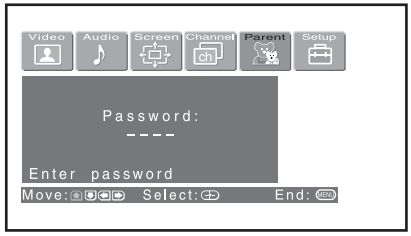

1 Press MENU.

2 Press ← or → to highlight the Parent icon and press ⊕.

3 Use the 0-9 buttons on the remote control to enter a four-digit password.

4 If this is the first time you are creating this password, confirm the password by entering it again. (The Parent Menu options appear.)

5 Press ↑ ↓ ← → to change settings. Press ⊕ to select the changed setting.

6 Press MENU to exit the Menu.

✍ You need your password for any future access into the Parent Menu. If you lose your password, see “Lost password” on page 113.

Selecting Parent Options

The Parent Menu includes the following options:

Option	Description	
Parental Lock *Turn ratings on/off and select a rating system*	Off	Parental lock is off. No programs are blocked from viewing.
	Child	Maximum ratings permitted are: US: TV-Y, TV-G, G Canada: C, G, TV-Y
	Youth	Maximum ratings permitted are: US: TV-PG, PG Canada: C8+, PG, 8 ans+, TV-PG
	Y. Adult	Maximum ratings permitted are: US: TV-14, PG-13 Canada: 14+, 13 ans+, TV-14
	Custom	Select to set ratings manually. US: See page 100 for details. Canada: See page 101 for details.

If you are not familiar with the Parental Guideline rating system, you should select Child, Youth, or Y.Adult to help simplify the rating selection. To set more restrictive ratings, select Custom.

For descriptions of Child, Youth, and Y.Adult ratings, see page 98.

Option	Description	
Change Password	For changing your password.	
Select Country	U.S.A.	Select to use USA ratings (see page 100).
	Canada	Select to use Canadian ratings (see page 101).

To deactivate the Parental Control feature

❑ Set Parental Lock to OFF when in the Parent menu.

To change the password

1. Select Change Password option when in the Parent menu using the arrow button, and press ⊕.
2. Enter a new four-digit password using the 0-9 buttons.
3. Confirm the new password by entering it again.
4. Press MENU to exit the menu screen.

Viewing Blocked Programs

You can view a blocked program by entering the password.

1. Press ENTER when tuned to a blocked program.
2. Enter your password using the 0-9 buttons.
   Parental Control will be canceled temporarily until you turn your LCD projection TV off.

Selecting Custom Rating Options

To ensure maximum blocking capability, the age-based ratings should be blocked.

If you select Block, please be aware that the following programs may be blocked: emergency broadcasts, political programs, sports, news, public service announcements, religious programs and weather.

US custom rating options

If you selected U.S.A. as the country of residence on page 99, the Custom Rating Menu includes the following options. (If you selected Canada, see page 101.)

Option	Description	
Movie Rating	G	All children and General Audience.
	PG	Parental Guidance suggested.
	PG-13	Parental Guidance for children under 13.
	R	Restricted viewing, parental guidance is suggested for children under 17.
	NC-17 and X	No one 17 and under allowed.
TV Rating *Block programs by their rating, content or both*	Age-Based Options	
	TV-Y	All children.
	TV-Y7	Directed to children age 7 and older.
	TV-G	General Audience.
	TV-PG	Parental Guidance suggested.
	TV-14	Parents Strongly cautioned.
	TV-MA	Mature Audience only.
	Content-Based Options	
	FV	Fantasy Violence.
	D	Suggestive Dialogue.
	L	Strong Language.
	S	Sexual situations.
	V	Violence.
Unrated *Block programs or movies that are broadcast without a rating*	Block	Blocks all programs and movies that are broadcast without a rating.
	Allow	Allows programs and movies that are broadcast without a rating.

The content ratings will increase depending on the level of the age-based rating. For example, a program with a TV-PG V (Violence) rating may contain moderate violence, while a TV-14 V (Violence) rating may contain more intense violence.

Canadian custom rating options

If you selected Canada as the country of residence on page 99, the Custom Rating Menu includes the following options. (If you selected U.S.A., see page 100.)

Option	Description	
English Rating	C	All children.
	C8+	Children 8 years and older.
	G	General programming.
	PG	Parental Guidance.
	14+	Viewers 14 and older.
	18+	Adult programming.
French Rating	G	General programming.
	8 ans+	Not recommended for young children.
	13 ans+	Not recommended for ages under 13.
	16 ans+	Not recommended for ages under 16.
	18 ans+	Programming restricted to adults.
U.S.A. Rating	See “TV Rating” on page 100 for details.	

Using the Setup Menu

To select the Setup Menu

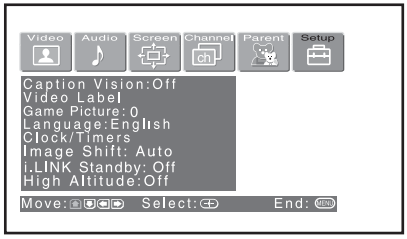

1 Press MENU.

2 Press ← or → to highlight the Setup icon and press ⊕.

3 Use the arrow button to scroll through the features.

4 Press ⊕ to select a feature. That feature's options appear.

5 Use the arrow button to scroll through the options.

6 Press ⊕ to select the desired option.

7 Press MENU to exit the menu screen.

Selecting Setup Options

Caption Vision options in the Setup menu apply only to analog programs. To set up closed captioning for digital progams, see "Using the Caption Vision Menu" on page 62.

The Setup menu includes the following options:

Option	Description	
Caption Vision	Allows you to select from three closed caption modes (for programs that are broadcast with closed captioning).	
	Off	Turns off Caption Vision.
	CC1, CC2, CC3, CC4	Displays a printed version of the dialog or sound effects of a program. (Should be set to CC1 for most programs.)
	Text1, Text2, Text3, Text4	Displays network/station information presented using either half or the whole screen (if available). For closed captioning, set to CC1.
	Info	Displays the program name and the time remaining in the program (if the broadcaster offers this service). Displays when the channel is changed or the DISPLAY button is pressed.

Option	Description	
Video Label	Allows you to label the audio/video components you connected to the LCD projection TV so you can identify them when using TV/VIDEO. When in the Setup menu's Video Label feature, press ↑ or ↓ to highlight an input to label, then press ⊕ to select it. Use the arrow button to scroll through the labels. Press ⊕ to select the component you connected to each of the input jacks on the back of your LCD projection TV. Select Skip if you do not have a component connected to a particular set of input jacks.	
	Video 1/2/3/4	VHS, DVD, Receiver, Satellite, Cable Box, 8mm, DTV, Game, LD, Web, Beta, Skip
	Video 5/6/7	DVD, Satellite, Cable Box, DTV, HD, Game, Skip
	If you select Skip, your LCD projection TV skips this connection when you press TV/VIDEO.	
Game Picture	Adjust	Allows you to move the position of the picture left and right in the window. (Available for the picture of connected equipment.) Select while watching the picture to be adjusted. The LCD projection TV stores the position in memory for each input.
Language	Select to display all on-screen menus in your language of choice: English, Español, Français.	

(Continued)

Option	Description	
Clock/Timers	Select to set the clock and to program your LCD projection TV to turn on and off at two scheduled viewing times.	
	Sleep	Allows you to select the time in minutes (15, 30, 45, 60 or 90 min) at you want the TV to remain on before shutting off automatically.
	Timer 1 Timer 2	You can use the Timers to program the TV to turn on and off and tune to a specific channel at two scheduled viewing times.

Timer 1 and Timer 2 are not available to be set until you set the Current Time.

1 Press ↑ or ↓ to highlight Timer 1 or Timer 2. To set the timer, press →.

2 Press ↑ or ↓ to highlight one of the following options, then press (⊳).

Program	Select to set the Timer by day, time, duration, and channel.
Off	Select to turn off the Timer. (Your previous settings are saved.)

3 If you selected Program in step 2, press ↑ and ↓ to set the day(s), hour, minute, duration, and channel number. Press (⊳) or press → to confirm each setting and move to the next setting.
Press ← to go back to the previous setting.

4 Press MENU to exit the Menu. An LED on the front panel will light, indicating the timer has been set.

✍ To go directly to programming Timer 1 or 2, press (⊳) instead of pressing →.

Current Time

1 Press (⊳) to select Current Time.

2 Press ↑ and ↓ to set the current time (day, hour, and minute). Press (⊳) (or press →) to comfirm each setting and move to the next setting. Press ← to go back the previous setting.

3 Press MENU to exit the Menu.

Option	Description	
Image Shift	Corrects the Image on your LCD projection TV. Before adjusting 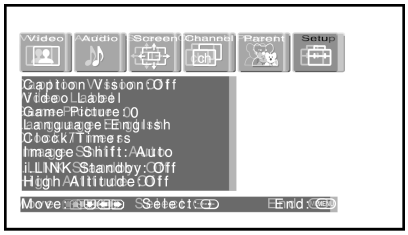 After adjusting 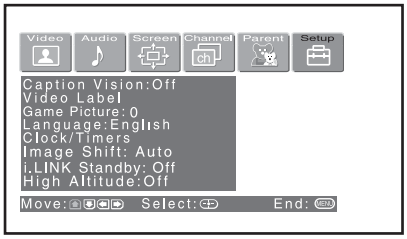 	
	Auto	(Factory setting) Automatically corrects double images.
	Level 1-4	Select the value with which double images are improved.
i.LINK Standby	On	Allows the i.LINK signal to pass through to connected i.LINK devices even when the LCD projection TV is turned off. The front panel i.STANDBY (i.LINK standby) LED lights in red. The LCD projection TV uses more standby power than when this option is set to Off.
	Off	Does not allow the i.LINK signal to pass through to connected i.LINK devices when the LCD projection TV is turned off. The front panel i.STANDBY (i.LINK Standby) LED turns off. The LCD projection TV uses less standby power than when this option is set to On.
High Altitude	Off	Select to use the LCD projection TV at normal altitude.
	On	Select to use the LCD projection TV at an altitude of 1,500 m or higher.

Other Information

Overview

This chapter includes the following topics:

Topic	Page
Glossary	107
Contacting Sony	108
Troubleshooting	108
Flashing Indicators on the Front of the Monitor	114
Specifications	115
Optional Accessories	116
Index	117

Glossary

analog signal
A signaling method that uses continuous changes in the amplitude or frequency of an electronic transmission to convey information.

aspect ratio
Refers to the ratio between the width and height of the screen. This LCD projection TV has a 16:9 (widescreen) aspect ratio, as opposed to a 4:3 aspect ratio.

4:3 aspect ratio

16:9 aspect ratio

component video

Component video is sent through three cables: two color shade (chrominance) signals and one brightness (luminance) signal. Component video achieves greater color accuracy than composite video or S VIDEO by splitting chrominance into two separate portions.

composite video

Composite video is sent through a single cable. Composite video combines the color shade (chrominance) and brightness (luminance) information into one video signal.

digital television (DTV)
A new technology for transmitting and receiving broadcast television signals. DTV provides higher resolution and improved sound quality over analog television.

National Television System Committee (NTSC)
A unit of the Federal Communications Commission, Washington, DC, that establishes television standards in the United States, such as NTSC Color, the standard used in this LCD projection TV.

RF
Radio Frequency. That part of the frequency spectrum that is used to transmit TV and radio signals.

S VIDEO

S VIDEO requires a single cable, which carries the brightness (luminance) and color (chrominance) signals of the picture separately. S VIDEO provides better resolution than composite video, which carries the signals together.

VHF/UHF
VHF (Very High Frequency) is the part of the frequency spectrum from 30 to 300 megahertz. UHF (Ultra High Frequency) is the part of the frequency spectrum from 300 to 3,000 megahertz.

480i
Provides 480 lines of resolution. Displays images using interlaced scanning, which first transmits all the odd lines on the LCD projection TV screen and then the even lines.

480p
Provides 480 lines of resolution. Displays images using progressive scanning, which transmits each line from top to bottom.

720p
Provides 720 lines of resolution. Displays images using progressive scanning, which transmits each line from top to bottom.

1080i
Provides 1080 lines of resolution. Displays images using interlaced scanning, which first transmits all the odd lines on the LCD projection TV screen and then the even lines. 1080i is one of the formats used by HDTV (High Definition TV).

Contacting Sony

If, after reading these operating instructions, you have additional questions related to the use of your Sony television, please call our Customer Information Services Center at 1-800-222-SONY (7669) (US residents only) or (416) 499-SONY (7669) (Canadian residents only).

Troubleshooting

Twin View

Problem	Possible Remedies
I cannot get Twin View to work	❑ If you are using a cable box to unscramble all channels (as shown on page 30), you cannot use the Twin View feature. This is because the cable box can unscramble only one channel at a time. ❑ You can use Twin View to view a signal from a different source that is connected to the LCD projection TV's A/V jacks (such as a VCR or DVD player) in the second window by pressing TV/VIDEO while in Twin View. ❑ Sources connected to the CABLE, VIDEO 5, VIDEO 6 and VIDEO 7 inputs, as well as digital source display in the left Twin View window, but not in the right.
There is no Twin View window, or it is just static	❑ Be sure the Twin View window is set to a video input or channel that has a signal airing. ❑ You might be tuned to a video input with nothing connected to it. Try cycling through the video inputs by pressing TV/VIDEO.
Twin View cannot display anything but TV channels	❑ Try cycling through the video inputs by pressing TV/VIDEO. Check that the Video Label option is not set to Skip. (See the Setup Menu on page 102.)
Twin View displays the same program in both windows	❑ Both Twin View windows might be set to the same channel. Try changing channels in either window.

Remote Control

Problem	Possible Remedies
Remote control does not operate	❑ The batteries could be weak. Replace the batteries. ❑ Check the orientation of the batteries. ❑ Press FUNCTION repeatedly until the TV indicator lights up. You may have inadvertently pressed FUNCTION, which changes the remote control to SAT or CABLE mode. ❑ Make sure this unit's power cord is connected securely to the wall outlet. ❑ Locate the unit at least 3-4 feet away from fluorescent lights.

Problem	Possible Remedies
Cannot change channels with the remote control	❑ If you are using the LCD projection TV to change channels, first press FUNCTION repeatedly until the TV indicator lights up. ❑ If you are using another device to change channels, be sure you have not inadvertently switched your LCD projection TV from the channel 3 or 4 setting. Use the Channel Fix option to “fix” the channel based on the hookup you used (see page 96). ❑ If you are using another device to change channels, be sure to press FUNCTION for that device. For example, if you are using your cable box to change channels, be sure to press FUNCTION repeatedly until the SAT/CABLE indicator lights up.
Remote control does not operate non-Sony video equipment	❑ If you replaced the batteries to the remote recently, the code numbers for the video equipment may need to be reset. ❑ There may be more than one code for the equipment that you are attempting to operate. ❑ There is a possibility that some non-Sony equipment cannot be operated by your Sony LCD projection TV remote. You may need to use the equipment’s original remote control.

Memory Stick

Problem	Possible Remedies
Image does not display/Cannot see all files	❑ Some variations of MPEG1 movies may not play back correctly. ❑ Make sure the image file is a JPEG (.jpg, .jpeg) file or an MPEG1 (.mpg, mpeg) file. ❑ Make sure the Memory Stick is inserted properly (see page 66). ❑ Check the Filter option setting (see page 77). ❑ Check the Select Contents setting (see page 77) and ensure that files are either in DCF directories if Digital Camera Folders is selected (see page 77), or in the currently selected folder if Select a Folder is selected (see page 77). ❑ The maximum number of files the Memory Stick Viewer can display is 1,024.
JPEG image displays undesirable motion or flicker in full screen	❑ JPEGs captured using a digital video camera may appear to display motion in full screen. This is a result of the way digital video cameras record still images, and is not a result of a malfunction with the LCD projection TV.
Rotation not saved after Memory Stick is ejected or Memory Stick Viewer is closed	❑ The Memory Stick might be locked. Unlock the Memory Stick and try rotating the image again. ❑ The file might not have information (EXIF data) that is usually generated when a digital camera records a photo. In this case, it is not possible to save the rotation. ❑ There might be insufficient space on the Memory Stick to save the rotated file. Try deleting one or more files and rotating the image again.
Cannot show (or hide) file information in full screen or Slide Show	❑ Set the File/Information option to On or Off (see pages 72 and 75).
Cannot see menu	❑ Press ↑ to display the menu again.
Cannot hear audio while using Memory Stick	❑ Check the LCD projection TV’s volume or Speaker (page 93) settings. ❑ To hear JPEG voice memo, select the Digital Camera Folders option and set the Filter option to Show All. ❑ Check that the Music option is not to set to Off (see page 76).

(Continued)

Problem	Possible Remedies	
Not all MP3 files on Memory Stick are included when the Music /Complete List option is selected (page 76)	❑ The maximum number of MP3 files the Memory Stick Viewer can display is 128. ❑ Make sure that the file is named with the file extension (.mp3).	
MPEG1 movie does not play back correctly	❑ Some variations of MPEG1 movies may not be compatible with the Memory Stick Viewer.	
MPEG1 quality is poor when enlarged (page 74)	❑ The quality of the movie when enlarged depends on the resolution of the MPEG1 file. See your camera's instruction manual for details.	
MP3 files on the Memory Stick are not listed	❑ Only MP3 files that are named with the file extension (.mp3) are displayed in the list.	
Music files are playing in wrong order	❑ MP3 files are played in alphabetical order, according to the folder in which they are stored. If you want to change the playlist order, rename your files alphabetically in the order in which you want them to play.	
Cannot see MP3 list to play music	❑ MP3 files on your Memory Stick only can be played as background music during a Slide Show (see page 76).	
Error message is displayed	❑ No Memory Stick	There is no Memory Stick in the slot.
	❑ Memory Stick is Locked	The lock mechanism on the Memory Stick is engaged.
	❑ Memory Stick Error	The Memory Stick in the slot might be damaged; try a different Memory Stick.
	❑ Format Error	The Memory Stick may have been formatted using a PC or other device that is not compatible with cameras.
Error icon is displayed		The file is not a valid MPEG1 or JPEG format.
		The thumbnail is not DCF-compatible.
		The file is a JPEG or an MPEG1, but the thumbnail is unreadable.
		The file is unreadable.

Video

Problem	Possible Remedies
No picture (screen not lit), no sound	❑ If your LCD projection TV does not turn on, and a red light keeps flashing, your LCD projection TV may need service. Call your local Sony Service Center. ❑ Make sure the power cord is plugged in. ❑ Press POWER on the front of the LCD projection TV. ❑ Press TV/VIDEO to cycle through the connected video sources. ❑ Try another channel; it could be station trouble.
Dark, poor or no picture (screen lit), good sound	❑ Adjust the Picture option in the Video Menu (see page 88). ❑ Adjust the Brightness option in the Video Menu (see page 88). ❑ Check the antenna/cable connections.
No color	❑ Adjust the Color option in the Video Menu (see page 88).
Only snow and noise appear on the screen	❑ Check the antenna/cable connections. ❑ Try another channel; it could be station trouble. ❑ Press ANT to change the input mode (see page 47).
Dotted lines or stripes	❑ Adjust the antenna. ❑ Move the LCD projection TV away from noise sources such as cars, neon signs, or hair-dryers.
Double images	❑ Using a highly directional outdoor antenna or a cable may solve the problem. ❑ Set the Image Shift to an appropriate value. The default setting is Auto. If doubled images appear with Auto, select the best value from 1 to 4 (see page 105).
“Black box” on screen	❑ You have selected a text option in the Setup Menu and no text is available. (See page 102 to reset Setup selections.) To turn off this feature, set the Caption Vision option to Off. If you were trying to select closed captioning, select CC1 instead of Text 1-4.
Black bands appear at the top and bottom of the screen	❑ Some wide-screen programs are filmed in aspect ratios that are greater than 16:9 (this is especially common with theatrical releases). Your LCD projection TV will show these programs with black bands at the top and bottom of the screen. For more details, check the documentation that came with your DVD (or contact your program provider).
Certain programs on DVD or other digital sources display a loss of detail, especially during fast-motion or dark scenes	❑ The compression used by certain digital broadcasts and DVDs may cause your LCD projection TV’s screen to display less detail than usual, or cause artifacts (small blocks or dots, pixelations) to appear on your screen. This is due to your LCD projection TV’s large screen and ability to show very fine detail, and is normal for certain digitally recorded programs. Adjust the reality/clarity in the DRC Palette menu (see page 90) to optimize the picture while viewing these sources.

Audio

Problem	Possible Remedies
Good picture, no sound	❑ Press MUTING so that Muting disappears from the screen (see page 52). ❑ Make sure the Speaker option is set to On in the Audio Menu (see page 93).
Audio noise	❑ Communication problems may occur if the infrared communication equipment (e.g., infrared cordless headphones) is used near the LCD projection TV. Please use headphones other than infrared cordless headphones. Also, if you use the infrared communication equipment other than infrared cordless headphones, move the infrared transceiver away from the LCD projection TV until the noise is eliminated, or move the transmitter and receiver of the infrared communication equipment closer together.
Cannot gain enough volume when using a cable box	❑ Increase the volume of the cable box using the cable box's remote control. Then press FUNCTION repeatedly until the LCD projection TV indicator lights up and adjust the LCD projection TV's volume.
Sound seems weak or insufficient	❑ The LCD projection TV's audio might be set to Auto SAP or Mono, when it might be better set to Stereo. In the Audio Menu (see page 93), set the MTS setting to Stereo. If already set to Stereo, switch to Mono (which may reduce background noise during weak stereo broadcasts).
Cannot raise the volume on external speakers	❑ If the Speaker option is set to Off and the Audio Out option is set to Fixed (in order to output the sound to your audio system) use your audio receiver to adjust the sound (see page 93). Or, to use the LCD projection TV remote control, set the Audio Out option to Variable. ❑ To turn on the LCD projection TV speakers, set the Speaker option to On (see page 93).

Channels

Problem	Possible Remedies
Cannot receive upper channels (UHF) when using an antenna	❑ Press ANT to select the VHF/UHF input (see page 47). ❑ Use Auto Program in the Channel Menu to add receivable channels that are not presently in the LCD projection TV's memory (see page 96).
TV is fixed to one channel	❑ Use Auto Program in the Channel Menu to add receivable channels that are not presently in the LCD projection TV's memory (see page 96). ❑ Check your Channel Fix settings (see page 96).
Cannot receive any channels when using cable TV	❑ Use Auto Program in the Channel Menu to add receivable channels that are not presently in the LCD projection TV's memory (see page 96). ❑ Press ANT to select the CABLE input (see page 47).
Cannot receive or select channels	❑ Use Auto Program in the Channel Menu to add receivable TV channels that are not presently in LCD projection TV memory (see page 96).
Some digital cable channels are not being displayed	❑ Certain cable companies have limitations on the broadcast of digital cable channels. Check with your cable company for more information. ❑ The digital cable channel may be set to Hide in the Digital Setup Menu (see page 62).

General

Problem	Possible Remedies
How to restore Video settings to factory settings	❑ Press RESET on the remote control while in the Video Menu (see page 88).
How to restore Audio settings to factory settings	❑ Press RESET on the remote control while in the Audio Menu (see page 92).
Cannot cycle through the other video equipment connected to the LCD projection TV	❑ Be sure the Video Label option is not set to Skip (see page 103).
Cannot operate Menu	❑ If a menu option appears in gray, this indicates that the menu option is not available.
Lost password	❑ In the password screen (see page 98), enter the following master password: 4357. The master password clears your previous password; it cannot be used to temporarily unblock channels. ❑ The i.LINK STANDBY LED blinks when the signal from an i.LINK device is being shown.
The signal from a selected i.LINK device is not being displayed	❑ If you have several i.LINK devices connected and operating at once, the LCD projection TV may not be able to display the signal from the selected device. Turn the other i.LINK devices off, and reselect the desired i.LINK device.

Flashing Indicators on the Front of the Monitor

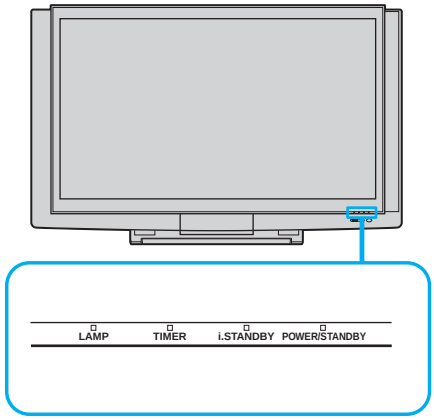

The POWER/STANDBY (green or red) and/or LAMP (red) indicators indicate the conditions of the LCD projection TV and warnings by lighting or flashing, as follows.

The POWER/STANDBY (green) indicator flashes.

❑ The lamp for the light source is ready to turn on.

The POWER/STANDBY (red) indicator flashes three times.

❑ The lamp cover is not attached securely. When you correct, the POWER/STANDBY indicator lights in red and the LCD projection TV enters the standby mode (see page 16).

The LAMP indicator flashes.

❑ The lamp for the light source burns out.
Replace it with new one (see page 13).

If the LCD projection TV is not recovered after correcting the problems, contact with qualified Sony personnel.

Specifications

Projection System	3 LCD Panels, 1 lens projection system	
LCD Panel	0.87 inch TFT LCD panel Approx. 3.28 million dots (1,042,168 pixels)	
Projection Lens	High Performance, large diameter hybrid lens F2.4	
Antenna	75 ohm external terminal for VHF/UHF	
Lamp	UHP lamp, 120W XL-2100U	
Television System	NTSC, American TV Standard	
Screen Size (measured diagonally)	KDF-60XBR950: 60 inches KDF-70XBR950: 70 inches	
Channel Coverage		
VHF	2-13	
UHF	14-69	
DTV	1-999	
CATV	1-125	
Power Requirements	120V, 60 Hz	
Number of Inputs/Outputs		
DVI-HDTV	1 terminal, 3.3 V T.M.D.S., 50 ohms The DVI-HDTV input terminal is compliant with the EIA-861 standard and is not intended for use with personal computers.	
Video (IN)	4	1 Vp-p, 75 ohms unbalanced, sync negative
S Video (IN)	4	Y: 1 Vp-p, 75 ohms unbalanced, sync negative C: 0.286 Vp-p (Burst signal), 75 ohms
Audio (IN)	6	500 mVrms (100% modulation) Impedance: 47 kiloohms
AUDIO (VAR/FIX) OUT	1	500 mVrms at the maximum volume setting (Variable) 500 mVrms (Fixed) Impedance (output): 2 kiloohms
CONTROL S (IN)	1	minijack
CONTROL S (OUT)	1	minijack
Component Video Input	2 (Y, P_B, P_R)	Y: 1.0 Vp-p, 75 ohms unbalanced, sync negative P_B: 0.7 Vp-p, 75 ohms P_R: 0.7 Vp-p, 75 ohms
RF Inputs	2	
Digital Audio Optical Output (PCM/Dolby Digital)	1	Optical Rectangular (1)
i.LINK	3 total (1 on front panel)	4-pin S400 i.LINK terminal
Speaker Output	5 W (L), 5 W (R), 20 W (Woofer)	
Dimensions (W × H × D)	KDF-60XBR950: 1,600 × 1,008 × 583 mm (63 × 39 3/4 × 23 inches) KDF-70XBR950: 1,821 × 1,143 × 647 mm (71 3/4 × 45 × 25 1/2 inches)	

Mass	KDF-60XBR950: 78.5 kg (173 lbs) KDF-70XBR950: 92.5 kg (204 lbs)
Power Consumption	
In Use	250 W
In Standby	Under 1 W
In i.LINK Standby	Under 20 W
Supplied Accessories	
Remote Control	RM-Y914
AA (R6) Batteries	2 supplied for remote control
Cleaning Cloth	1
Optional Accessories	
TV Stand	SU-GW3
Lamp	XL-2100U
AV Cable	VC-810S/820S/830S
Component Video Cable	VMC-10/30
i.LINK cables	VMC-IL4415 (4-pin to 4-pin, 1.5 meters); VMC-IL4435 (4-pin to 4-pin, 3.5 meters)

Design and specifications are subject to change without notice.

Index

A

Activating a Twin View screen **55**
Add Digital Channels **62**
Adding channels to the channel list **97**
Adjusting audio, Steady Sound **92**
Advanced Video **89**
Alternate Audio **61**
Alternate Video **61**
Antenna, connecting **25, 26**
Audio menu **87, 92**
Audio receiver, connecting **39**
Auto Program (channel setup) **45**
Auto Setup **45**

B

Balance, adjusting **92**
Bass, adjusting **92**
Batteries, inserting in remote **17**
Bilingual audio **93**
Black Corrector **90**
BN Smoother **90**
Brightness, adjusting **88**

C

Cable
- connecting **26**
- with VCR, connecting **32**

Cable box
- connecting with VCR **33**
- using with TV remote control **51**

Camcorder, connecting **42**
Caption Vision **102**
Caption Vision menu, for digital channels **62**
CATV. *See cable*
Channel menu **87, 96**
Channel Show/Hide **62**
Channel Skip/Add **97**
Channels
- Auto Program **96**
- creating labels **97**
- setting up **45**

Cinema Black **91**
CineMotion **89**
Cleaning Cloth **12**
Clear White **90**
Clock/Timers **104**
Closed caption modes **102**
Color Corrector **90**
Color temperature, adjusting **89**
Color, adjusting **88**
Connecting
- Audio receiver **39**
- Cable box **32–34**
- Cable or antenna **25**
- Camcorder **42**
- DVD player **40, 41**
- Satellite receiver **36–38**
- VCR **32–35, 37**

Contents of box **17**
CONTROL S **44**

D

Detail Enhancer **90**
Digital Caption Setup **62**
Digital Caption Setup menu **63**
Digital Setup menu **62**
Digital Signal Strength **62**
Digital subchannels **61**
DISPLAY button **47**
Display, turning off **47**
DRC (Digital Reality Creation) Mode, described **9**
DRC Mode **89**
DVD player
- using with TV remote control **51**
- with A/V connectors, connecting **41**
- with component video connectors, connecting **40**

E

Enlarging pictures, in Twin View **57**
error messages, Memory Stick **110**

F

Favorite Channel
- setting up **96**
- using **54**

FAVORITES button **47**
Features **9**
FREEZE button **47**
Freeze, using **52, 58**

Front Panel Controls **21**
FUNCTION button **46**

G

Gamma Corrector **90**
GUIDE button **60**
Guide menu **61**

H

Hue, adjusting **88**

I

i.LINK **10, 80–86**
i.LINK Standby **105**
Image Shift **105**
Inputs, labeling **103**
Installation of the projection TV **25–44**
interlaced **107**

J

JUMP button **47**
Jump, using **52**

L

Label
- Channels **97**
- video inputs **103**

Lamp, replacing **13–16**

M

MDP, using with TV remote control **51**
Memory Stick
- Duo **67**
- features **64**
- Index **69**
- indicator (LED) **22**
- inserting **66**
- insertion slot **22**
- panning photos **73**
- photo options **72**
- playing movies **74**
- precautions **79**
- removing **68**
- rotating photos **73**
- slide show options **76**
- troubleshooting **109**
- viewing photos **71**
- zooming photos **73**

MEMORY STICK button **47**
MENU button **47**
Menus
- Audio **87, 92**
- Channel **87, 96**
- Parent **87, 98**
- Screen **87, 94**
- Setup **87, 102**
- Video **87, 88**

Mild Mode **89**
MODE
- Pro **53, 88**
- Standard **53, 88**
- Vivid **53, 88**

MTS/SAP **93**
Muting, using **52**

N

NR **89**

P

Parental control, described **9**
Password, changing **99**
PICTURE button **46**
Picture contrast, adjusting **88**
Picture size, adjusting in Twin View **57**
POWER buttons (GREEN) **47**
POWER/STANDBY **114**
Presetting channels **45**
problems, troubleshooting **108–113**
Program Guide **60**
Program Options menu **61**
progressive **107**

R

Ratings
- setting **99**
- viewing blocked programs **99**

Rear panel controls and connections **23**
Remote control
- Function of buttons **52**
- inserting batteries **17**
- programming **48**

Removing channels from the channel list **97**
RESET button **47**
Resetting
- Audio options **92**
- Video options **88**

S

SAT/CABLE function button **46**

SAT/CABLE power button **47**
Satellite receiver
    connecting **36**
    satellite receiver, using with TV remote control **50**
Screen menu **94**
Setting up channels **45**
Setup menu **87, 102**
Sharpness, adjusting **89**
Specifications **115–116**
Steady Sound
    adjusting **92**
Surround sound **92**

T

Timer
    set current **104**
Timer setting **104**
Treble, adjusting **92**
troubleshooting **108–113**
TV function button **46**
TV power button **47**
TV/VIDEO button **47**
Twin View™
    activating a picture **55**
    described **9**
    using **55**

V

VCR
    using with TV remote control **50**
    with cable box, connecting **33**
    with cable, connecting **32**
    with satellite receiver, connecting **37**
Video inputs, labeling **103**
Video menu **87, 88**
Video Modes, selecting **88**
Viewing area, recommended **20**
VOL +/– button **47**

W

WIDE button **46**

Z

Zoom feature, with Twin View **57**

http://www.sony.net/

Printed in U.S.A.